CITY OF OWOSSO
WATER TREATMENT PLANT
WASH WATER PUMP & PIPING REPLACEMENT

OWOSSO, SHIAWASSEE COUNTY, MI

DWRF #7457-01

INDEX OF SHEETS	
SHEET NO.	DESCRIPTION
G-101	COVER
G-102	GENERAL NOTES
P-001	LEGEND
P-101	HYDRAULIC PROFILE
P-102	PROCESS FLOW DIAGRAM
P-103	GENERAL DEMOLITION
P-201	BACKWASH PUMP & PIPING PLAN & SECTIONS
P-202	LOSS OF HEAD TRANSMITTERS
P-203	HIGH SERVICE PIPE PLAN
P-301	PUMP, VALVE & PIPE SCHEDULES
P-401	DETAILS
I-101	PROPOSED PIPING AND INSTRUMENTATION DIAGRAM
E-001	GENERAL ELECTRICAL INFORMATION
E-201	LOWER LEVEL AND WELL HOUSE POWER PLANS
E-202	UPPER LEVEL POWER PLAN
E-401	PROPOSED ONE-LINE DIAGRAM
E-402	ELECTRICAL DETAILS AND SCHEDULES
E-403	PUMP MOTOR AND VFD WIRING DIAGRAM
E-404	VFD WIRING DIAGRAM
E-405	CONTROL WIRING

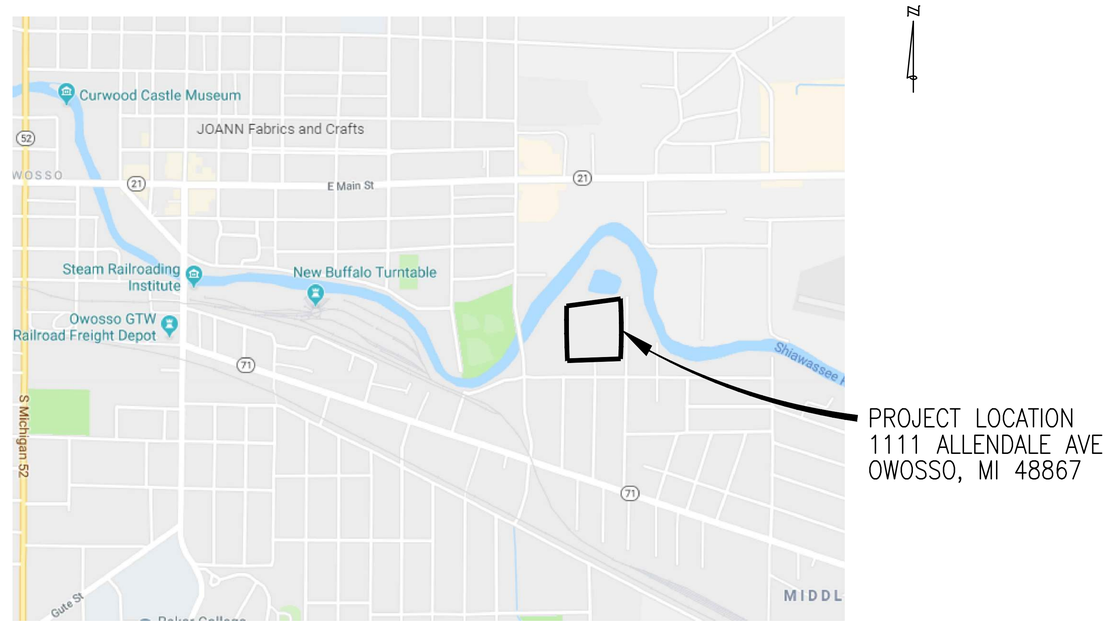

LOCATION MAP

N.T.S.

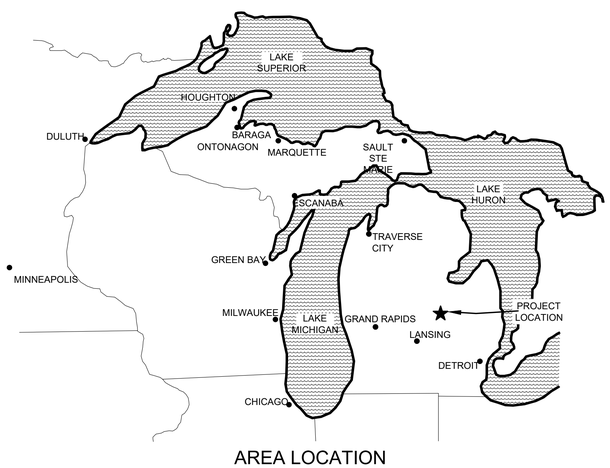

AREA LOCATION MAP

APPROVAL DATE	PERMITS	PERMIT NUMBER
12/13/2019	EGLE PART 399 PERMIT	W191067

ISSUED FOR BIDS

OHM PROJECT No. 0020-19-0040

PROJECT MANAGER: JENNIFER DRINAN, P.E.

DATE: 12/16/2019

OHM
Advancing Communities
34000 Plymouth Road | Livonia, MI 48150
p (734) 522-6711 | f (734) 522-6427

I Certify That The Overall Plans Were Prepared Under My Direct Supervision	I Certify That The Process Plans Were Prepared Under My Direct Supervision	I Certify That The Electrical Plans Were Prepared Under My Direct Supervision

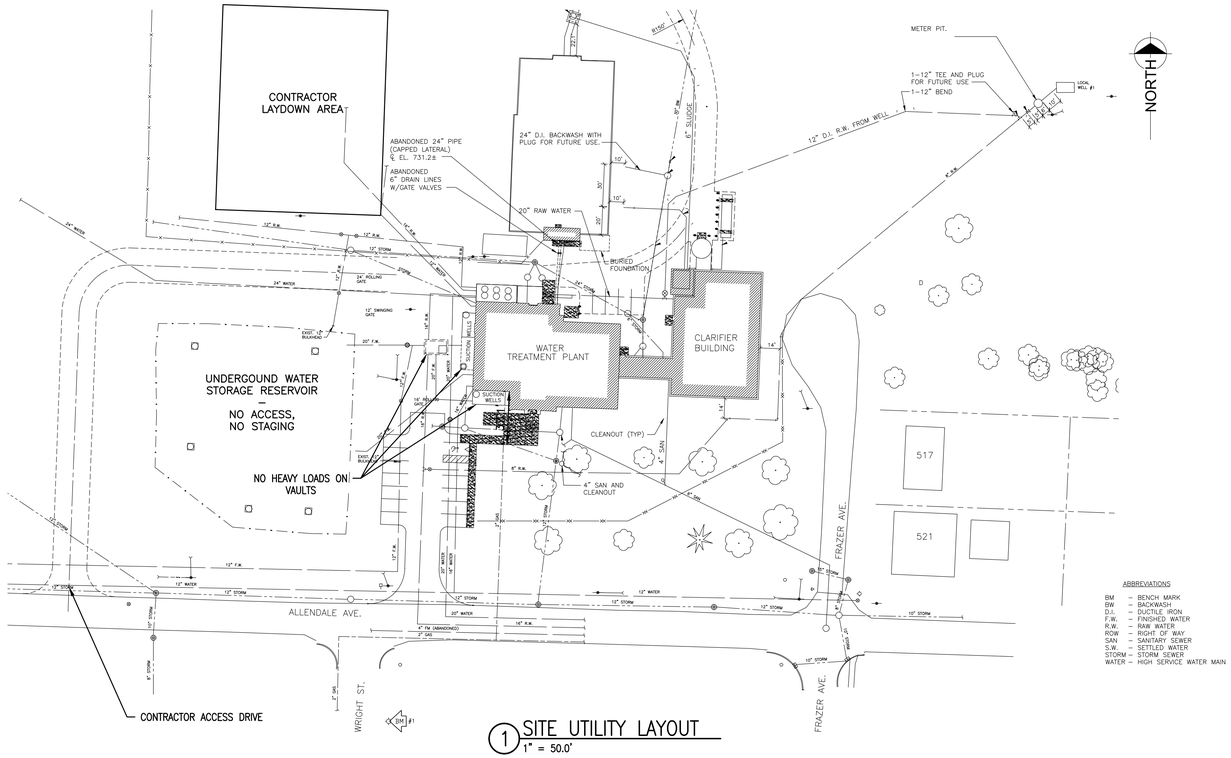

1 SITE UTILITY LAYOUT
1" = 50.0'

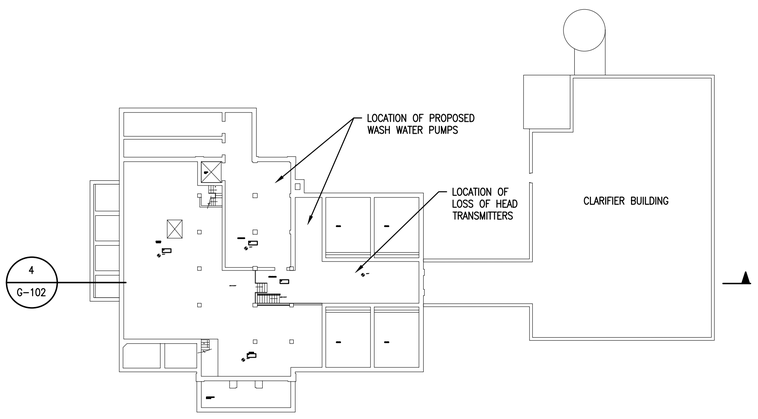

2 WATER TREATMENT PLANT LOWER LEVEL PLAN
DO NOT SCALE

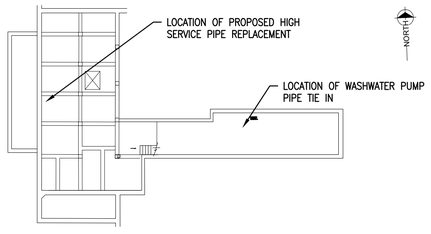

3 WATER TREATMENT PLANT SUBBASEMENT PLAN
DO NOT SCALE

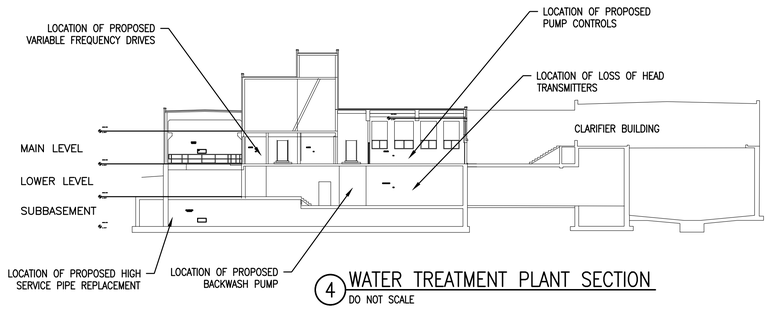

4 WATER TREATMENT PLANT SECTION
DO NOT SCALE

ABBREVIATIONS

BM	–	BENCH MARK
BW	–	BACKWASH
D.I.	–	DUCTILE IRON
F.W.	–	FINISHED WATER
R.W.	–	RAW WATER
ROW	–	RIGHT OF WAY
SAN	–	SANITARY SEWER
S.W.	–	SETTLED WATER
STORM	–	STORM SEWER
WATER	–	HIGH SERVICE WATER MAIN

GENERAL NOTES:

1. ALL NEW WORK IS SHOWN WITH HEAVY LINES AND IS INDICATED NEW UNLESS NOTED OTHERWISE.
2. THE CONTRACTOR'S ATTENTION IS CALLED TO THE FACT THAT ADDITIONAL CONTRACTS MAY BE LET ADJACENT TO HIS WORK AND THAT HE SHALL COORDINATE THOSE PORTIONS OF HIS WORK AFFECTED BY OTHERS. HE SHALL COOPERATE WITH THEM IN EVERY REASONABLE WAY SO THAT THERE SHALL BE A MINIMUM PRACTICABLE INTERFERENCE WITH THEIR OPERATIONS.
3. THE CONTRACTOR SHALL MAKE AN ON-SITE INSPECTION OF THE FACILITY AND RELATED CONDITIONS PRIOR TO BIDDING THIS CONTRACT.
4. THE CONTRACTOR SHALL TAKE ALL NECESSARY PRECAUTIONS TO PROTECT EXISTING STRUCTURES, UTILITIES AND EQUIPMENT, AND TO MAINTAIN UNINTERRUPTED FACILITY OPERATION. THE CONTRACTOR SHALL PROVIDE ALL TEMPORARY SUPPORTS, BRACES AND SHORING AS NECESSARY TO PROTECT AND MAINTAIN ALL STRUCTURES, PIPING, EQUIPMENT AND APPURTENANCES. ANY DAMAGE RESULTING FROM THE ACTIONS, OR LACK OF ACTIONS BY THE CONTRACTOR SHALL BE REPAIRED IMMEDIATELY BY THE CONTRACTOR AT HIS EXPENSE.
5. AN ASTERISK (*) AT NEW CONSTRUCTION DENOTES LOCATIONS, ELEVATIONS, DIMENSIONS AND OTHER INFORMATION DEPENDENT ON THE CONTRACTOR'S SUBMITTALS. THE CONTRACTOR SHALL DEVELOP AND SHOW THE INFORMATION MARKED WITH AN ASTERISK (*) ON HIS SUBMITTALS AND SHALL DEVELOP AND PROVIDE SUCH INFORMATION FOR ALL ASTERISKS (*) WITHIN OR INTERFACING WITH ANY SUBMITTALS AND BETWEEN SUBMITTALS. THIS REQUIREMENT ALSO EXTENDS TO CONDITIONS OR SITUATIONS WHERE A LOCATION, DIMENSION, ELEVATION OR OTHER ITEM IS INDICATED TO BE DETERMINED AFTER FINAL SELECTION OF EQUIPMENT AND/OR APPURTENANCES. ALL INFORMATION FOR ASTERISK (*) AND EQUIPMENT/-APPURTENANCES SITUATIONS DESCRIBED HEREIN ARE THE RESPONSIBILITY OF THE CONTRACTOR TO DEVELOP AND ASSURE COMPATIBLE INTERFACING FOR A COMPLETE, COORDINATED AND TROUBLE-FREE OPERATING INSTALLATION. ALL REQUIREMENTS HEREIN SHALL BE BASED ON FINAL PROCESSING AND/OR REVIEW OF THE CONTRACTOR'S SUBMITTALS OR SELECTIONS.
6. LOCATIONS, ELEVATIONS AND DIMENSIONS OF EXISTING PIPING, EQUIPMENT, STRUCTURES AND OTHER EXISTING WORK ARE BASED ON INFORMATION FURNISHED BY EXISTING RECORD DRAWINGS AND CONTRACT DOCUMENTS AND IN SOME INSTANCES FIELD MEASUREMENTS BUT DO NOT PURPORT TO BE ABSOLUTELY CORRECT. LOCATIONS, ELEVATIONS AND DIMENSIONS OF NEW WORK CONNECTING OR ADJACENT TO OR INTERFACING WITH EXISTING WORK HAVE BEEN DEVELOPED AND ARRANGED BASED ON THE FOREGOING INFORMATION AND FIELD MEASUREMENTS. THE CONTRACTOR IS RESPONSIBLE TO FIELD CHECK AND MEASURE LOCATIONS, ELEVATIONS AND DIMENSIONS AND TO FIT AND OTHERWISE INSTALL THE NEW WORK TO ACTUAL EXISTING LOCATIONS, ELEVATIONS AND DIMENSIONS FOR A COMPLETE AND TROUBLE-FREE OPERATING FACILITY.
7. THE CONTRACTOR IS RESPONSIBLE TO MAKE ALL MEASUREMENTS NECESSARY TO LOCATE, FABRICATE, ERECT, CONSTRUCT AND OTHERWISE INSTALL ALL NEW WORK IN EXISTING AND NEW LOCATIONS AND RELOCATE AND REWORK EXISTING WORK ALL TO THE ARRANGEMENTS, GUIDANCE AND INSTRUCTIONS SHOWN AND REQUIRED FOR A COMPLETE TROUBLE-FREE OPERATING INSTALLATION.
8. THE CONTRACTOR SHALL PAINT EXISTING FACILITIES AND WORK IF EXISTING PAINT OR COATINGS ARE DAMAGED BY THE CONTRACTOR'S OPERATIONS. ALL EXISTING WORK INCORPORATED WITHIN OR AS PART OF NEW WORK SHALL BE PAINTED IN ACCORDANCE WITH THE CONTRACT DOCUMENTS.
9. THE CONTRACTOR SHALL SUBMIT STRUCTURAL LOAD CALCULATIONS AND WORKING DRAWINGS PREPARED BY A REGISTERED PROFESSIONAL ENGINEER IN THE STATE OF MICHIGAN FOR PRIOR APPROVAL SHOWING ALL CONSTRUCTION LOADS ON EXISTING STRUCTURES AND FACILITIES AND SHALL DEMONSTRATE TO THE SATISFACTION OF THE ENGINEER THAT THE CAPACITY OF EXISTING STRUCTURES AND FACILITIES WILL NOT BE EXCEEDED BY ANY LOAD DEVELOPED DURING CONSTRUCTION.
10. ALL SHOP AND WORKING DRAWING SUBMITTALS SHALL BE PREPARED BY THE CONTRACTOR TO INCORPORATE ALL REQUIREMENTS AND RESPONSIBILITIES OF THESE GENERAL NOTES.
11. EXISTING FACILITIES OR WORK TO BE USED, IMPACTED OR OTHERWISE AFFECTED BY THE CONTRACTOR SHALL BE INSPECTED PRIOR TO STARTING WORK. IT SHALL BE THE RESPONSIBILITY OF THE CONTRACTOR TO REPAIR, MODIFY, UPGRADE, PROTECT, SUPPLEMENT OR SUPPORT EXISTING FACILITIES OR WORK TO OBTAIN THE DEGREE OF SERVICE REQUIRED BY THE CONTRACTOR TO PERFORM NEW WORK. THE CONTRACTOR SHALL RETURN EXISTING FACILITIES OR WORK TO ITS FUNCTIONAL EQUIVALENCY FOUND PRIOR TO THE START OF THE CONTRACTOR'S WORK TO THE SATISFACTION OF THE OWNER AND ENGINEER.
12. NEW PIPING TO BE SUPPORTED IN ACCORDANCE WITH SPECIFICATION SECTIONS 40 05 24 AND 40 05 17. AS THIS IS AN EXISTING FACILITY ALL NEW PIPING AND ASSOCIATED SUPPORTS WILL BE NEED TO BE ADJUSTED TO AVOID CONFLICTS WITH EXISTING EQUIPMENT AND APPURTENANCES INCLUDING BUT NOT LIMITED TO PIPING, PIPING SUPPORTS, CONDUITS, LIGHTING. CONTRACTOR SHALL PROVIDE ADDITIONAL SUPPORTS AS NEEDED TO ADEQUATELY SUPPORT PIPING WHILE AVOIDING EXISTING CONFLICTS. EXISTING ITEMS MAY BE RELOCATED BY THE CONTRACTOR IF REQUIRED AND APPROVED BY ENGINEER AND COORDINATED WITH THE OWNER. COSTS FOR ALL SUPPORTS AND RELOCATIONS SHALL BE INCLUDED IN THE CONTRACTORS BASE BID.
13. ALL COSTS ASSOCIATED WITH COMPLIANCE WITH THESE GENERAL NOTES SHALL BE INCLUDED IN THE VARIOUS CONTRACT ITEMS AND NO SEPARATE PAYMENT WILL BE MADE THEREFORE.
14. ALL MATERIALS IN CONTACT WITH POTABLE WATER SHALL BE CERTIFIED ACCORDING TO NSF 61 AND NSF 372, INCLUDING BUT NOT LIMITED TO PROTECTIVE BARRIER MATERIALS (CEMENTS, PAINTS, COATINGS), JOINING AND SEALING MATERIALS (GASKETS, ADHESIVES, LUBRICANTS), MECHANICAL DEVICES (WATER METERS, VALVES, FILTERS), PIPES AND RELATED PRODUCTS (PIPE, HOSE, FITTINGS), PLUMBING DEVICES (FAUCETS, DRINKING FOUNTAINS), PROCESS MEDIA (FILTER MEDIA, ION EXCHANGE RESINS), AND NON-METALLIC POTABLE WATER MATERIALS.
15. CONTRACTOR MAY CHOOSE TO UTILIZE A CRANE TO LOAD PUMPS AND OTHER MATERIALS INTO THE BUILDING THROUGH A FRONT WINDOW OF THE HIGH-SERVICE PUMP AREAS. CONTRACTOR IS RESPONSIBLE FOR REMOVAL AND REINSTALLATION OF WINDOW. CONTRACTOR SHALL RESTORE WINDOW AND LANDSCAPING TO ORIGINAL CONDITION. CONTRACTOR TO VERIFY ALL DISTANCES. DISTANCE FROM WALK TO FACE OF BUILDING IS APPROXIMATELY 37 FEET.

OHM
ARCHITECTS ENGINEERS PLANNERS
34000 Plymouth Road
Livonia, MI 48150
P (734) 522-6711 | F (734) 522-6427
OHM-ADVISORS.COM

REVISIONS
ISSUED FOR BIDS 12/16/2019

DATE	PROJ NUMBER	ENG	PROJ MGR	CADD	COUNTY	CITY/VILLAGE/TOWNSHIP	SCALE	HORIZ DATUM	VERT DATUM
	0050-19-0040	MA	JD	LM	SHIAWASSEE	OWOSSO	H: N/A V: N/A	N/A	N/A

CITY OF OWOSSO
WASH WATER PUMP & PIPING REPLACEMENT
GENERAL NOTES

SHEET G-102

COPYRIGHT 2017 OHM ALL DRAWINGS AND WRITTEN MATERIALS APPEARING HEREIN CONSTITUTE THE ORIGINAL AND UNPUBLISHED WORK OF OHM AND THE SAME MAY NOT BE DUPLICATED, DISTRIBUTED, OR DISCLOSED WITHOUT PRIOR WRITTEN CONSENT OF OHM

DRAWING PATH: \\ohmhdfs\corporate\Projects\0000_0100\0020190040_wtp_design_services\Drawings\facilities\Sheets\18004\G-102.DWG Dec 16, 2019 - 11:48am

MISCELLANEOUS SYMBOLS

- 3-WAY VALVE
- BFP — BACK FLOW PREVENTER
- HOSE BIB
- CONNECT TO EXISTING
- ELBOW DOWN
- ELBOW UP
- TEE UP
- TEE DOWN
- CLEAN OUT
- END CAP/BULKHEAD
- FLUSH/HOSE CONNECTION
- Y-STRAINER
- BASKET STRAINER
- REGULATOR
- FILTER
- LUBRICATOR
- FLEXIBLE CONNECTION
- IN-LINE MIXER
- AIR PUMP CONNECTION FITTING
- ULTRASONIC LEVEL INDICATOR
- SP — SAMPLE POINT
- CF — CHEMICAL FEED INJECTION POINT
- PROCESS FLOW DIRECTION
- PRESSURE GAGE
- PRESSURE GAGE W/ SHUT OFF
- PRESSURE GAGE W/ DIAPHRAGM SEAL
- PRESSURE GAGE W/ DIAPHRAGM SEAL & SHUTOFF VALVE
- PRESSURE GAGE W/ ISOLATION RING
- FM — FLOW METER
- PUMP
- BLOWER
- CHEMICAL METERING PUMP (SIDE VIEW)
- PARSHALL FLUME
- CALIBRATION COLUMN
- SIGHT GLASS
- ROTO-METER
- PULSATION DAMPENER
- MIXER MOTOR

PIPE SERVICE TYPE (SCHEMATIC ONLY)

- POTABLE WATER
- DRAIN
- RAW WATER
- AIR
- CHEMICAL
- INSTRUMENTATION

VALVE AND GATE TAG

CS 123 — VALVE OR GATE TYPE (I.E., CS IS CHECK VALVE, ETC)

INDIVIDUAL VALVE NUMBER

PIPE IDENTIFICATION

PIPE NUMBER (REFER TO PIPING SCHEDULE ON THE DRAWINGS)

15

VALVE DESIGNATIONS

SYMBOL: PIPEWORK DRAWINGS	SYMBOL: FLOW DIAGRAMS	MARK	VALVE TYPE
		GA	GATE VALVE
		CS	STANDARD CHECK VALVE
		CS	STANDARD CHECK VALVE (WAFER)
		CC	CUSHION CHECK VALVE
		SC	SILENT CHECK VALVE
		RC	RADIAL CHECK VALVE
		DC	DOUBLE VANE CHECK VALVE
		B	BUTTERFLY VALVE
		WB	BUTTERFLY VALVE (WAFER)
		PV	PLUG VALVE
		K	GATE VALVE - KNIFE
		BV	BALL VALVE
		BCV	BALL CONTROL VALVE
		RP	RUBBER PINCH VALVE
		CV	CONE VALVE
		PRV	PRESSURE CONTROL & REGULATING VALVE
		SV	SURGE OR PRESSURE RELIEF VALVE
		AV	ALTITUDE VALVE
SECTION / PLAN		PD	PLUG DRAIN OR MUD VALVE
		BW	BACKWATER (FLAP) VALVE
VERTICAL AXIS		FTV	FOOT VALVE
VERTICAL AXIS		TSV	TELESCOPIC VALVE
		TPSV	TAPPING SLEEVE & VALVE
SEE STRUCTURAL		PRW	PRESSURE RELIEF VALVE (WALL TYPE)
SEE STRUCTURAL		PRS	PRESSURE RELIEF VALVE (SLAB TYPE)
		FV	FLAP VALVE

PIPE JOINT DESIGNATIONS

DOUBLE LINE PIPING	SINGLE LINE PIPING	TYPE
		FLANGED JOINT
		MECHANICAL JOINT
	GFA	GROOVED FLANGE ADAPTER
	GPC	GROOVED PIPE COUPLING
	BFC	BOLTED FLEXIBLE COUPLING
	FCA OR RFCA	FCA=FLANGED COUPLING ADAPTER RFCA=RESTRAINED FLANGED COUPLING ADAPTER
	MFA	MEGAFLANGE ADAPTER
	FA	FLANGE ADAPTER
	FXJ	FLANGED EXPANSION JOINT
		UNION
		CONCENTRIC REDUCER
		ECCENTRIC REDUCER - FLUSH TOP
		ECCENTRIC REDUCER - FLUSH BOTTOM
		QUICK DISCONNECT COUPLING

EQUIPMENT TAG

PU - 001

INDIVIDUAL EQUIPMENT NUMBER

EQUIPMENT TYPE (I.E., PUMP, BLOWER)

OHM

ARCHITECTS ENGINEERS PLANNERS

34000 Plymouth Road
Livonia, MI 48150
P (734) 522-6711 | F (734) 522-6427

OHM-ADVISORS.COM

REVISIONS

ISSUED FOR BIDS	12/16/2019

DATE	PROJ NUMBER	ENG	PROJ MGR	CADD	COUNTY	CITY/VILLAGE/TOWNSHIP	SCALE			HORIZ DATUM	VERT DATUM
9/16/2019	0005-19-0040	MK	JD	LM	SHIAWASSEE	OWOSSO	H: N/A	V: N/A		N/A	N/A

CITY OF OWOSSO
WASH WATER PUMP & PIPING REPLACEMENT

LEGEND

SHEET P-001

COPYRIGHT 2017 OHM ALL DRAWINGS AND WRITTEN MATERIALS APPEARING HEREIN CONSTITUTE THE ORIGINAL AND UNPUBLISHED WORK OF OHM AND THE SAME MAY NOT BE DUPLICATED, DISTRIBUTED, OR DISCLOSED WITHOUT PRIOR WRITTEN CONSENT OF OHM

DRAWING PATH: \\ohmcdfs\corporate\Projects\0000_0100\0020190040_wtp_design_services\Drawings\facilities\Sheets\190040P-001.dwg Dec 16, 2019 - 11:50am

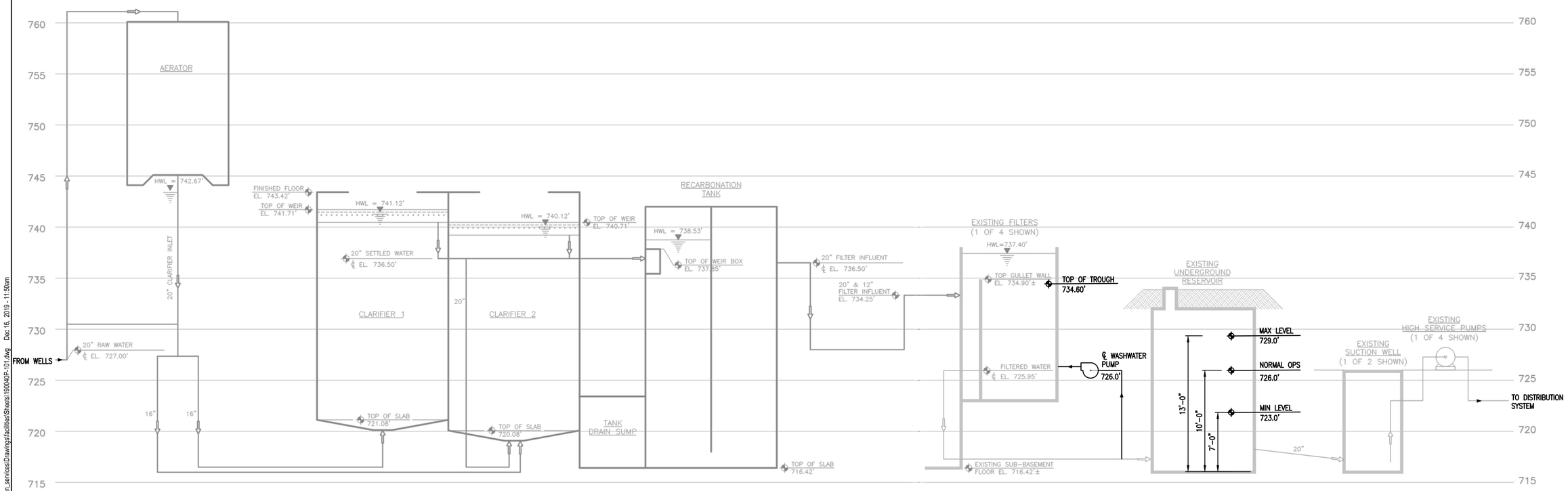

HYDRAULIC PROFILE

VERTICAL: 1" = 5'-0"
HORIZONTAL: NO SCALE

NOTE:
1. HIGH WATER LEVELS (HWL) CALCULATED AT 6 MGD WITH PARALLEL FLOW THROUGH CLARIFIERS AND ONE FILTER IN BACKWASH.
2. THIS DRAWING WAS ORIGINALLY PRODUCED BY FTH&C FOR OWOSSO UNDER CONTRACT 01299CD EXISTING INFORMATION (LIGHT LINE WORK) HAS NOT BEEN VERIFIED.

OHM
ARCHITECTS ENGINEERS PLANNERS
34000 Plymouth Road
Livonia, MI 48150
P (734) 522-6711 | F (734) 522-6427
OHM-ADVISORS.COM

REVISIONS:

ISSUED FOR BIDS	12/16/2019

DATE	PROJ NUMBER	ENG	PROJ MGR	CADD	COUNTY	CITY/VILLAGE/TOWNSHIP	H:	SCALE	V:	HORIZ DATUM	VERT DATUM
	0020-19-0040	MK	JD	LM	SHIAWASSEE	OWOSSO	NTS		NTS	N/A	N/A

CITY OF OWOSSO
WASH WATER PUMP & PIPING REPLACEMENT
HYDRAULIC PROFILE

SHEET P-101

COPYRIGHT 2016 OHM ALL DRAWINGS AND WRITTEN MATERIALS APPEARING HEREIN CONSTITUTE THE ORIGINAL AND UNPUBLISHED WORK OF OHM AND THE SAME MAY NOT BE DUPLICATED, DISTRIBUTED, OR DISCLOSED WITHOUT PRIOR WRITTEN CONSENT OF OHM

DRAWING PATH: \\ohmdfs\corporate\Projects\0000_0100\0020\190040_wtp_design_services\Drawings\facilities\Sheets\190040P-101.dwg Dec 16, 2019 - 11:50am

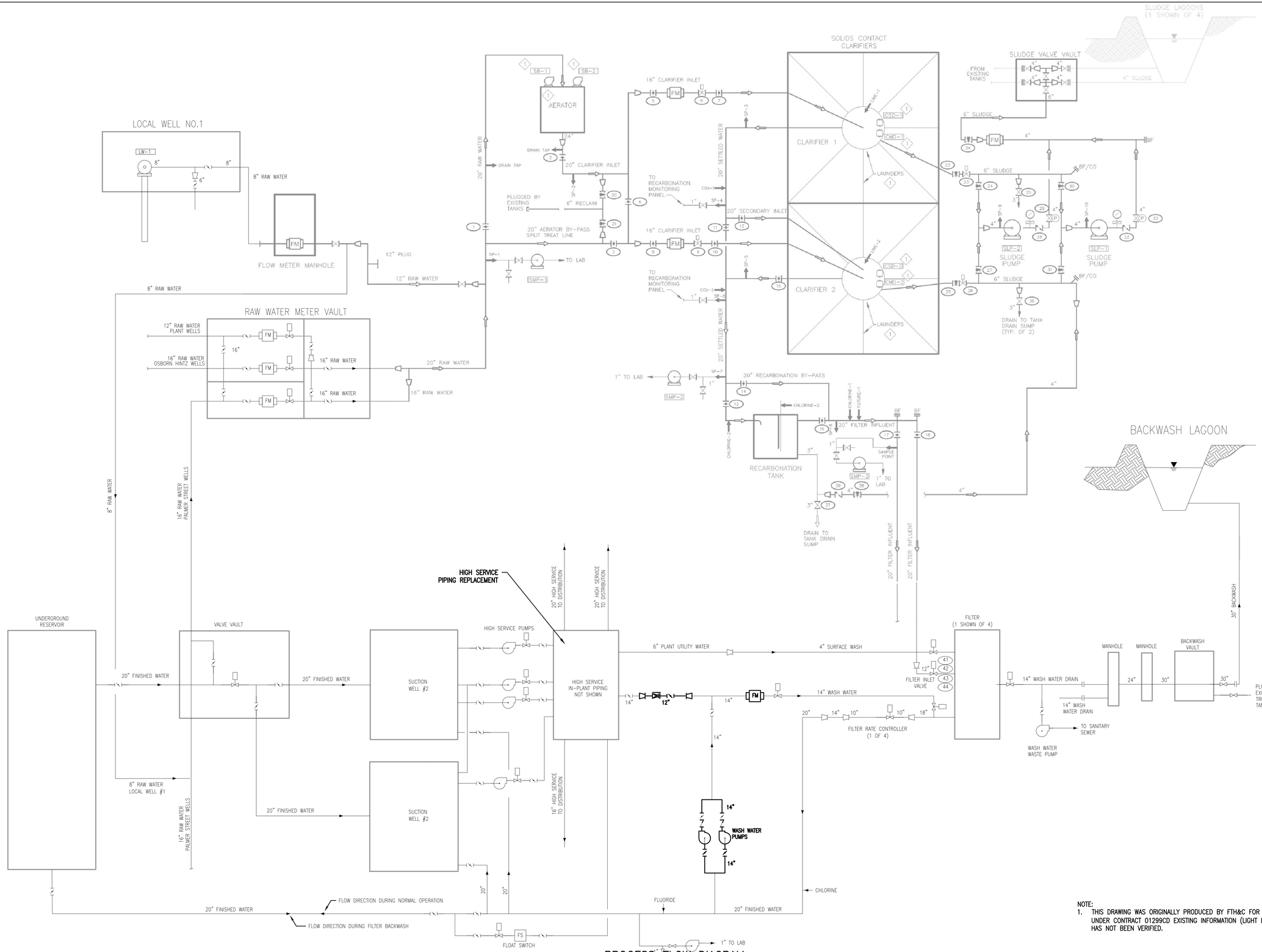

PROCESS FLOW DIAGRAM

NOTE:
1. THIS DRAWING WAS ORIGINALLY PRODUCED BY FTH&C FOR OWOSSO UNDER CONTRACT 01299CD EXISTING INFORMATION (LIGHT LINE WORK) HAS NOT BEEN VERIFIED.

OHM
ARCHITECTS ENGINEERS PLANNERS
34000 Plymouth Road
Livonia, MI 48150
P (734) 522-6711 | F (734) 522-6427
OHM-ADVISORS.COM

REVISIONS:
ISSUED FOR BIDS 12/16/2019

DATE	PROJ NUMBER	ENG	PROJ MGR	CADD	COUNTY	CITY/VILLAGE/TOWNSHIP	SCALE		HORIZ DATUM	VERT DATUM
	0000-19-0040	MK	JD	LM	SHIAWASSEE	OWOSSO	H: NTS	V: NTS	N/A	N/A

CITY OF OWOSSO
WASH WATER PUMP & PIPING REPLACEMENT
PROCESS FLOW DIAGRAM

SHEET P-102

COPYRIGHT 2016 OHM ALL DRAWINGS AND WRITTEN MATERIALS APPEARING HEREIN CONSTITUTE THE ORIGINAL AND UNPUBLISHED WORK OF OHM AND THE SAME MAY NOT BE DUPLICATED, DISTRIBUTED, OR DISCLOSED WITHOUT PRIOR WRITTEN CONSENT OF OHM

DRAWING PATH: \\ohmdfs\corporate\Projects\0000_0100\0020190040_wtp_design_services\Drawings\facilities\Sheets\190040P-101.dwg Dec 16, 2019 - 11:50am

NOTES:

1. CONTRACTOR SHALL COORDINATE WITH WTP SUPERINTENDENT TO SHUTDOWN AND REMOVE PROPELLER METER TO FACILITATE ACCESS TO SUBBASMENT. THIS LINE MAY ONLY BE TAKEN OUT OF SERVICE WHILE ALL OTHER SUBBASEMENT PIPING IS IN SERVICE
2. DETAIL 1 WAS ORIGINALLY PRODUCED BY CAPITAL CONSULTANTS FOR OWOSSO UNDER CONTRACT 93-147 EXISTING INFORMATION (LIGHT LINE WORK) HAS NOT BEEN VERIFIED.

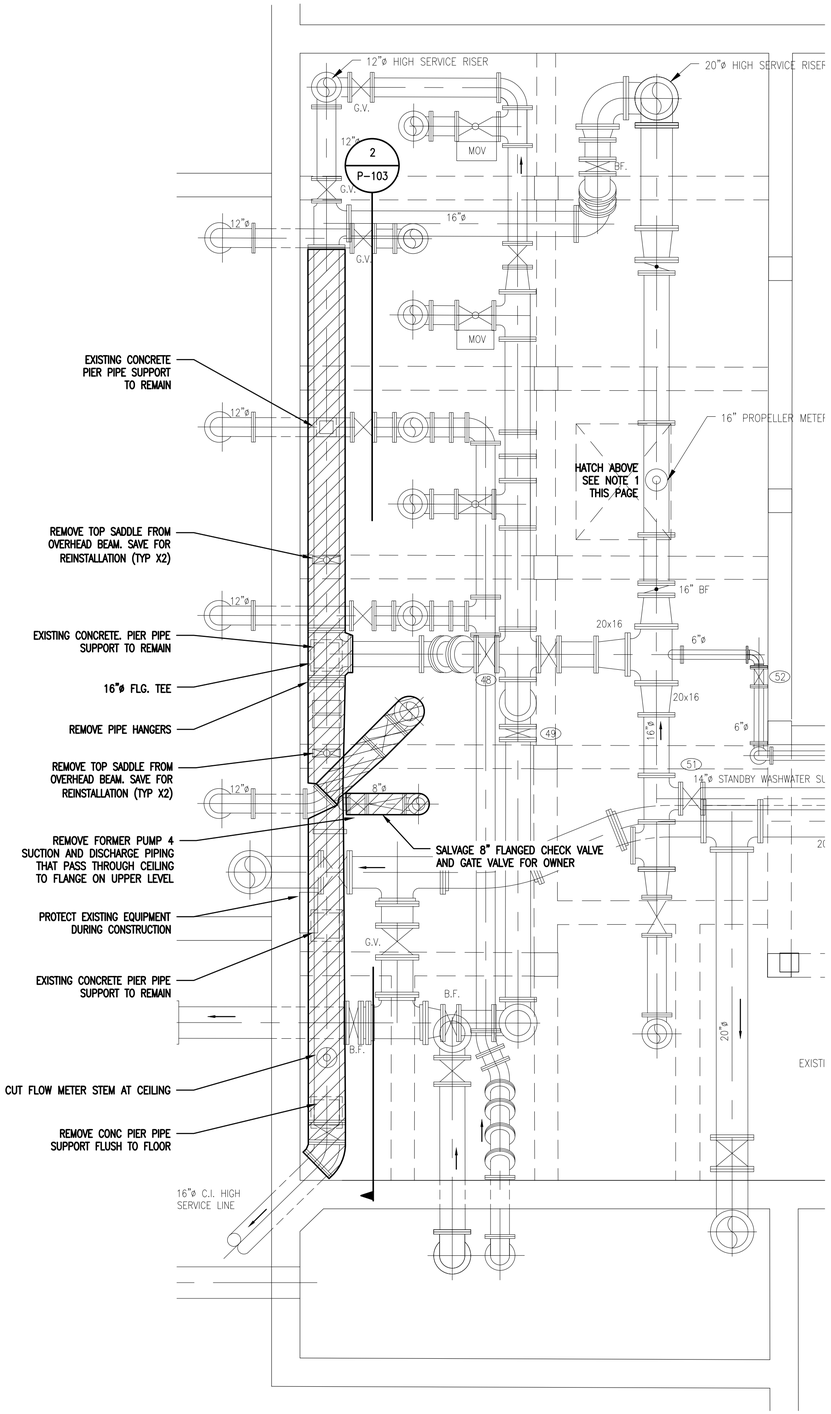

1 HIGH SERVICE PIPE PLAN – DEMOLITION
1/4" = 1'-0"

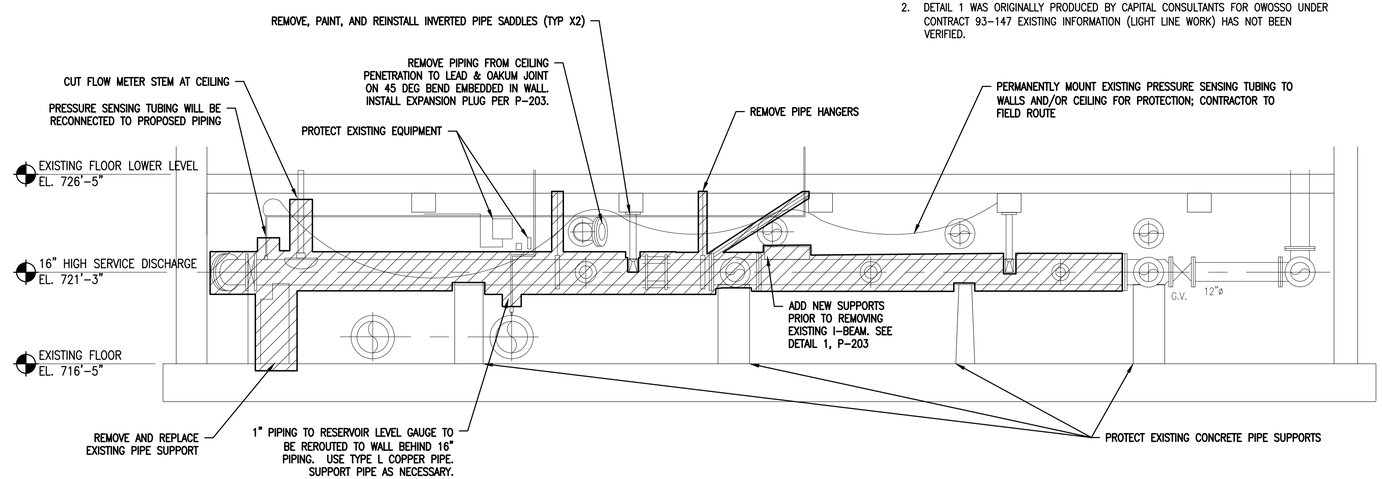

2 HIGH SERVICE PIPE SECTION – DEMOLITION
1/4" = 1'-0"

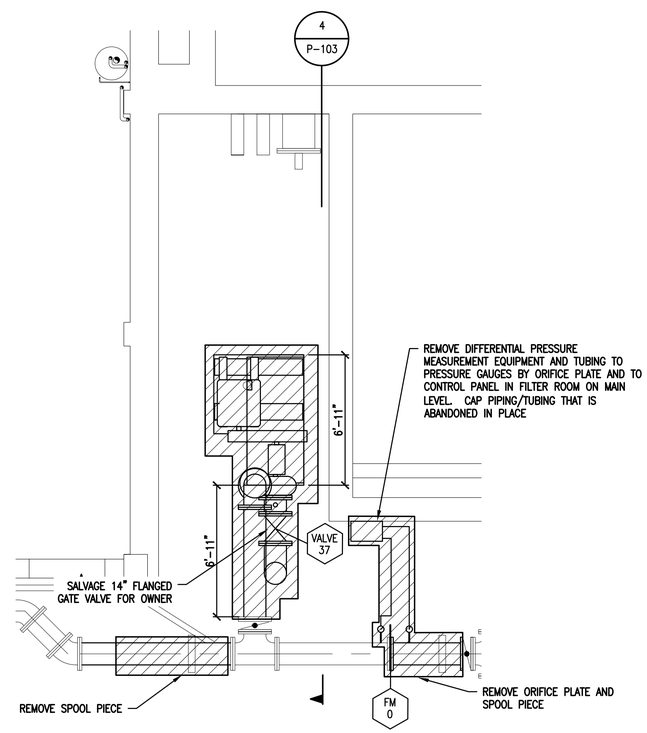

3 EXISTING PUMP DEMO PLANVIEW
1/4" = 1'-0"

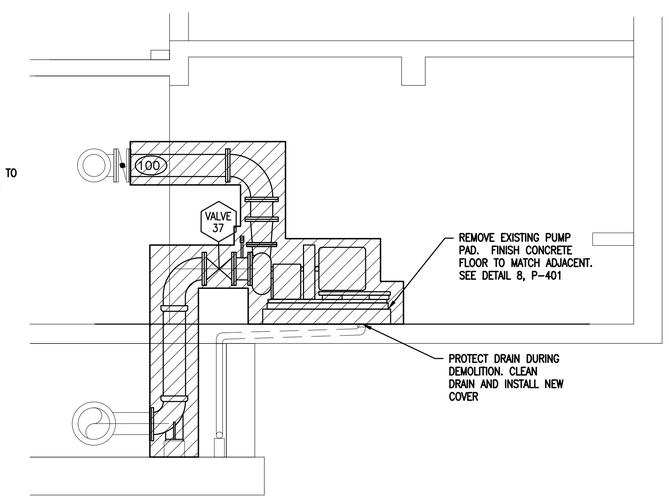

4 EXISTING PUMP DEMO ELEVATION
1/4" = 1'-0"

OHM
ARCHITECTS ENGINEERS PLANNERS
34000 Plymouth Road
Livonia, MI 48150
P (734) 522-6711 | F (734) 522-6427
OHM-ADVISORS.COM

REVISIONS:
ISSUED FOR BIDS 12/16/2019

DATE	PROJ NUMBER	ENG	PROJ MGR	CADD	COUNTY	CITY/VILLAGE/TOWNSHIP	SCALE		HORIZ DATUM	VERT DATUM
	0020-15-0040	MK	JD	LM	SHIAWASSEE	OWOSSO	H: NTS	V: NTS	NA	NA

CITY OF OWOSSO
WASH WATER PUMP & PIPING REPLACEMENT
GENERAL DEMOLITION

SHEET P-103

COPYRIGHT 2016 OHM ALL DRAWINGS AND WRITTEN MATERIALS APPEARING HEREIN CONSTITUTE THE ORIGINAL AND UNPUBLISHED WORK OF OHM AND THE SAME MAY NOT BE DUPLICATED, DISTRIBUTED, OR DISCLOSED WITHOUT PRIOR WRITTEN CONSENT OF OHM

DRAWING PATH: \\ohmdfs\corporate\Projects\0000_0100\0020\190040_wtp_design_services\Drawings\facilities\Sheets\190040P-201.DWG Dec 16, 2019 - 11:50am

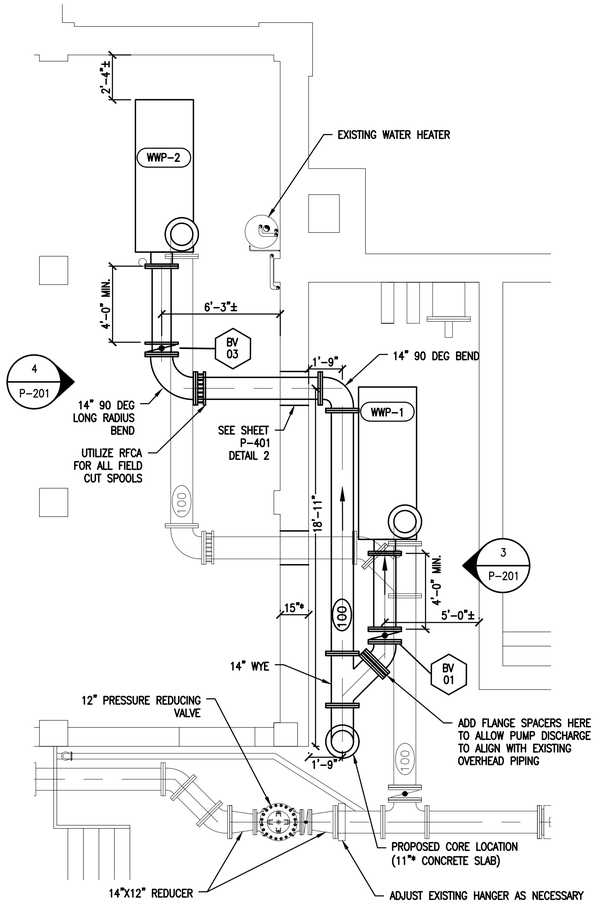

1 SUCTION PIPING
1/4" = 1'-0"

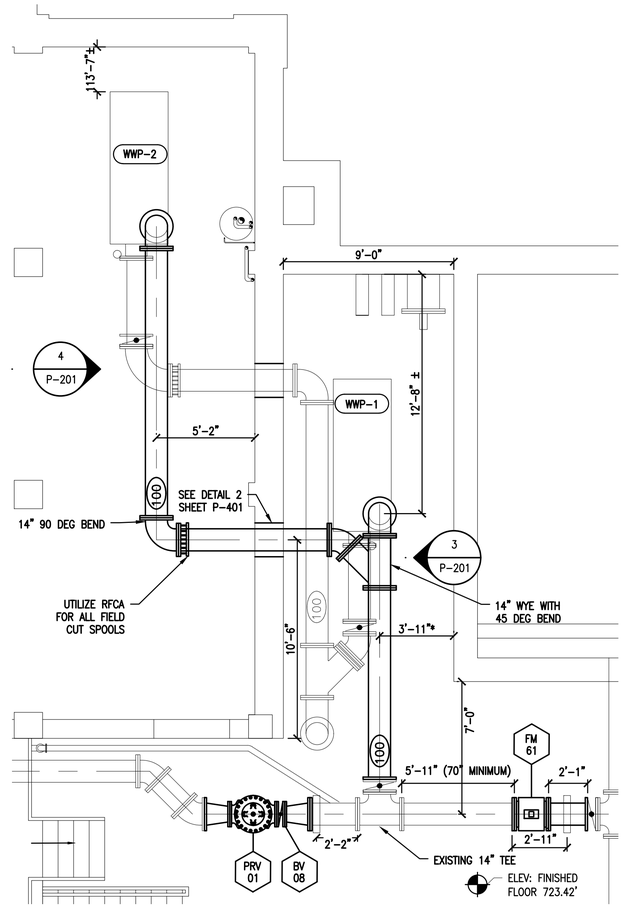

2 DISCHARGE PIPING
1/4" = 1'-0"

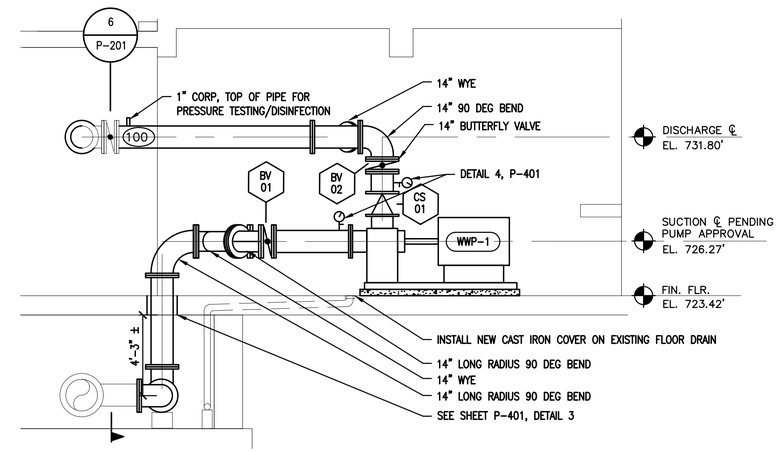

3 WASHWATER PUMP WWP-1 ELEVATION
1/4" = 1'-0"

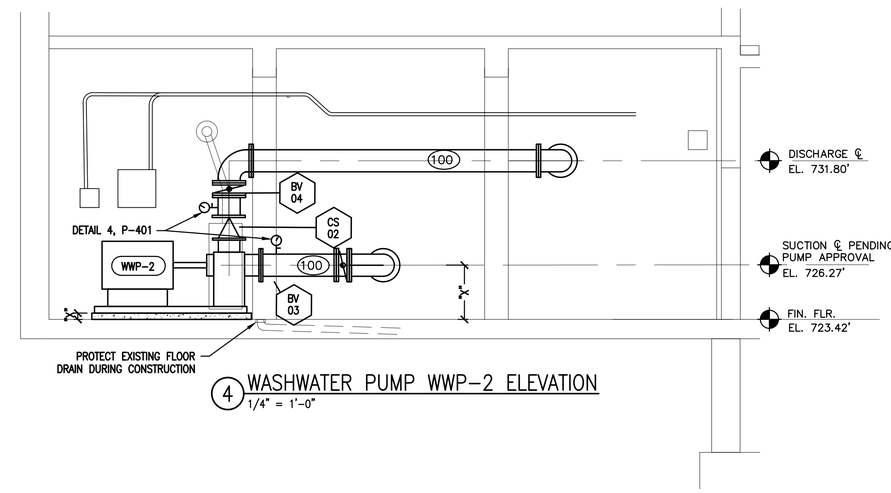

4 WASHWATER PUMP WWP-2 ELEVATION
1/4" = 1'-0"

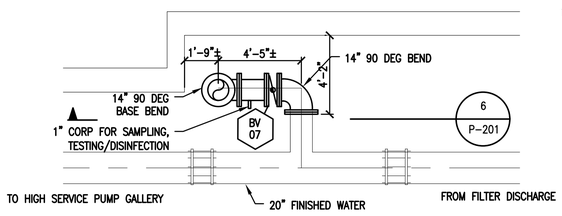

5 SUBBASEMENT CONNECTION PLAN VIEW
1/4" = 1'-0"

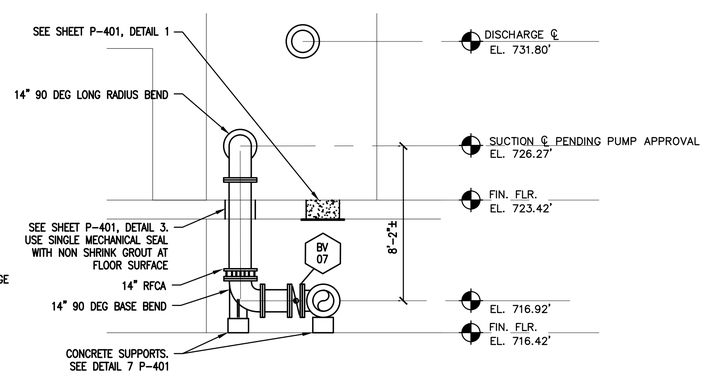

6 SUBBASEMENT CONNECTION SECTION
1/4" = 1'-0"

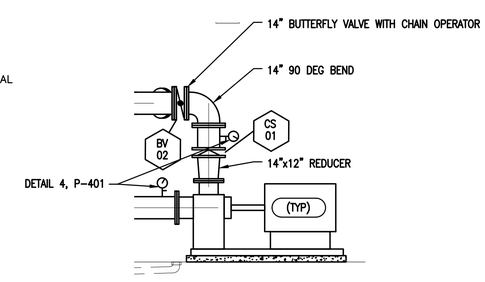

7 ALTERNATE PIPE LAYOUT FOR 12" PUMP DISCHARGE
1/4" = 1'-0"

NOTES:

1. AN ASTERISK (*) AT NEW CONSTRUCTION DENOTES LOCATIONS, ELEVATIONS, DIMENSIONS AND OTHER INFORMATION DEPENDENT ON THE CONTRACTOR'S SUBMITTALS. THE CONTRACTOR SHALL DEVELOP AND SHOW THE INFORMATION MARKED WITH AN ASTERISK (*) ON HIS SUBMITTALS AND SHALL DEVELOP AND PROVIDE SUCH INFORMATION FOR ALL ASTERISKS (*) WITHIN OR INTERFACING WITH ANY SUBMITTALS AND BETWEEN SUBMITTALS. THIS REQUIREMENT ALSO EXTENDS TO CONDITIONS OR SITUATIONS WHERE A LOCATION, DIMENSION, ELEVATION OR OTHER ITEM IS INDICATED TO BE DETERMINED AFTER FINAL SELECTION OF EQUIPMENT AND/OR APPURTENANCES. ALL INFORMATION FOR ASTERISK (*) AND EQUIPMENT/-APPURTENANCES SITUATIONS DESCRIBED HEREIN ARE THE RESPONSIBILITY OF THE CONTRACTOR TO DEVELOP AND ASSURE COMPATIBLE INTERFACING FOR A COMPLETE, COORDINATED AND TROUBLE-FREE OPERATING INSTALLATION. ALL REQUIREMENTS HEREIN SHALL BE BASED ON FINAL PROCESSING AND/OR REVIEW OF THE CONTRACTOR'S SUBMITTALS OR SELECTIONS.

2. DIMENSIONS "X" OR WITH ± WILL BE DEPENDENT UPON THE PUMP SELECTED. PIPING & EQUIPMENT PAD SHALL BE ADJUSTED ACCORDINGLY.

3. CONTRACTOR TO ADD FLANGE SPACERS BETWEEN BUTTERFLY VALVES AND ADJACENT FITTING IF NECESSARY TO PROVIDE OPENING CLEARANCE.

4. PIPE SUPPORTS NOT SHOWN FOR NEW PUMP EQUIPMENT. CONTRACTOR TO PROVIDE ALL SUPPORTS NECESSARY TO ENSURE PIPES ARE ADEQUATELY SUPPORTED AND WEIGHT IS NOT SUPPORTED FROM PUMP FLANGES. PIPING ON SUCTION SIDE OF PUMPS TO BE SUPPORTED FROM THE FLOOR. PIPING ON DISCHARGE SIDE OF PUMPS TO BE SUPPORTED FROM CEILING. CONTRACTOR TO ACCOMMODATE EXISTING PIPING WITH PIPE SUPPORT DESIGN.

OHM
ARCHITECTS ENGINEERS PLANNERS
34000 Plymouth Road
Livonia, MI 48150
P (734) 522-6711 | F (734) 522-6427
OHM-ADVISORS.COM

REVISIONS:
ISSUED FOR BIDS 12/16/2019

DATE	PROJ NUMBER	ENG	PROJ MGR	CADD	COUNTY	CITY/VILLAGE/TOWNSHIP	SCALE			HORIZ DATUM	VERT DATUM
	0020-19-040	MK	JD	LM	SHIAWASSEE	OWOSSO	H: NTS	V: NTS		N/A	N/A

CITY OF OWOSSO
WASH WATER PUMP & PIPING REPLACEMENT
WASH WATER PUMP & PIPING PLAN & SECTIONS

SHEET P-201

COPYRIGHT 2016 OHM ALL DRAWINGS AND WRITTEN MATERIALS APPEARING HEREIN CONSTITUTE THE ORIGINAL AND UNPUBLISHED WORK OF OHM AND THE SAME MAY NOT BE DUPLICATED, DISTRIBUTED, OR DISCLOSED WITHOUT PRIOR WRITTEN CONSENT OF OHM

DRAWING PATH: \\ohmfs\corporate\Projects\0000_0100\0020190040_wtp_design_services\Drawings\facilities\Sheets\190040P-201.DWG Dec 16, 2019 - 11:51am

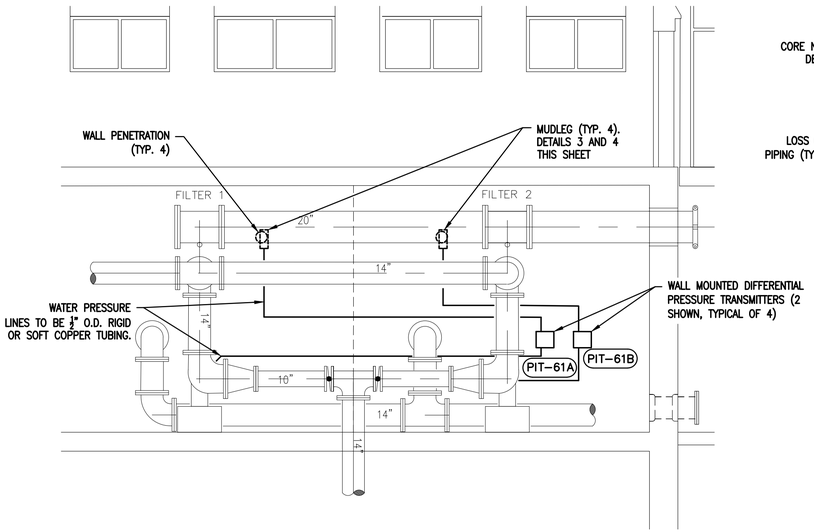

1 FILTER PIPE GALLERY
1/4" = 1'-0"

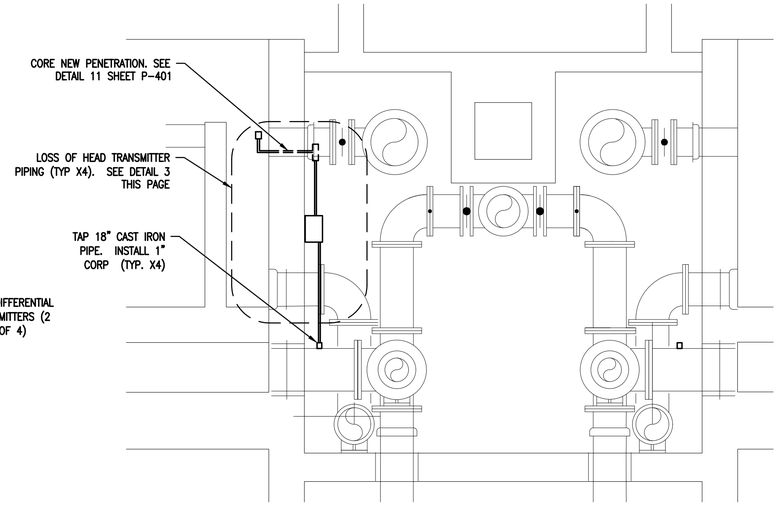

2 FILTER PIPE GALLERY SECTION
3/8" = 1'-0"

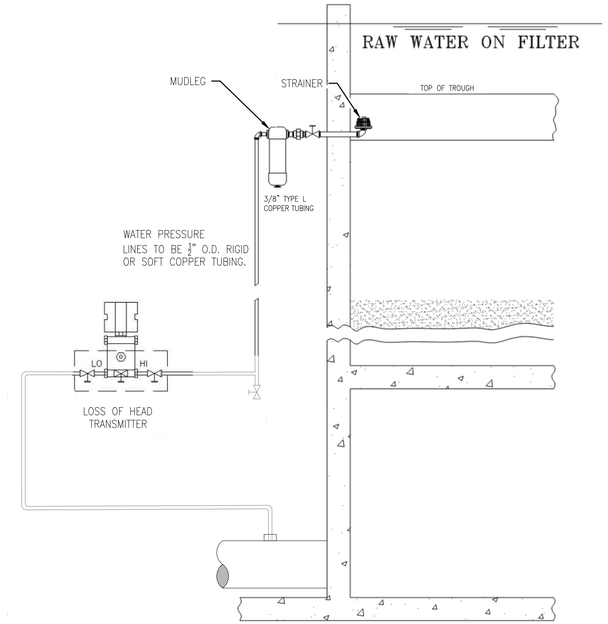

3 LOSS OF HEAD TRANSMITTER DETAIL
NO SCALE

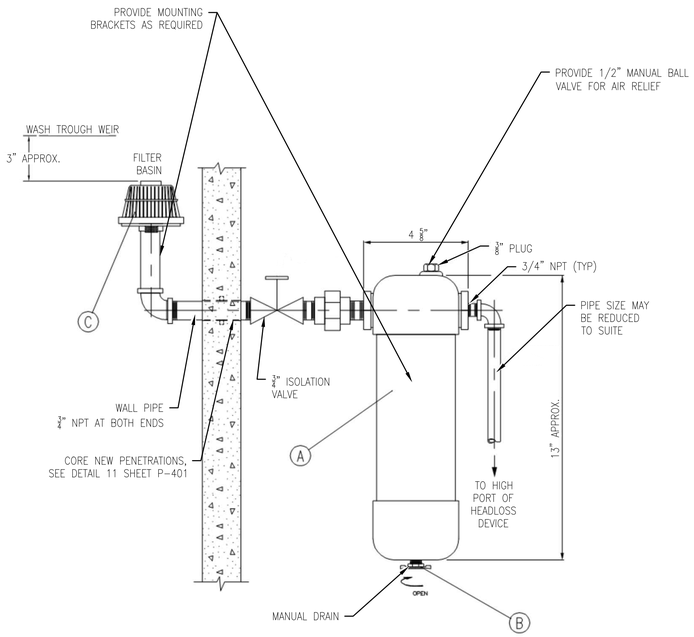

4 MUDLEG DETAIL
NO SCALE

PARTS LIST (PER UNIT)			
TAG	DESCRIPTION	MATERIAL	LEOPOLD PART #
	MUDLEG & STRAINER ASSEMBLY CONSISTING OF THE FOLLOWING PARTS		
A	MUDLEG	PVC	
	3" CAP, SCHEDULE 40	PVC	102-207-110
	BUSHING, 1" X 3/4"	PVC	102-208-020
	3" PIPE, SCHEDULE 40	PVC	106-070-053
	FLAT, 1/4" X 3"	PVC	120-020-030
	PIPE PLUG, 3/8" NPT	BRASS	102-107-011
B	MANUAL DRAIN	BRASS	107-040-050
C	STRAINER, 3/4" NPT	POLYPRO PLYENE	107-001-060

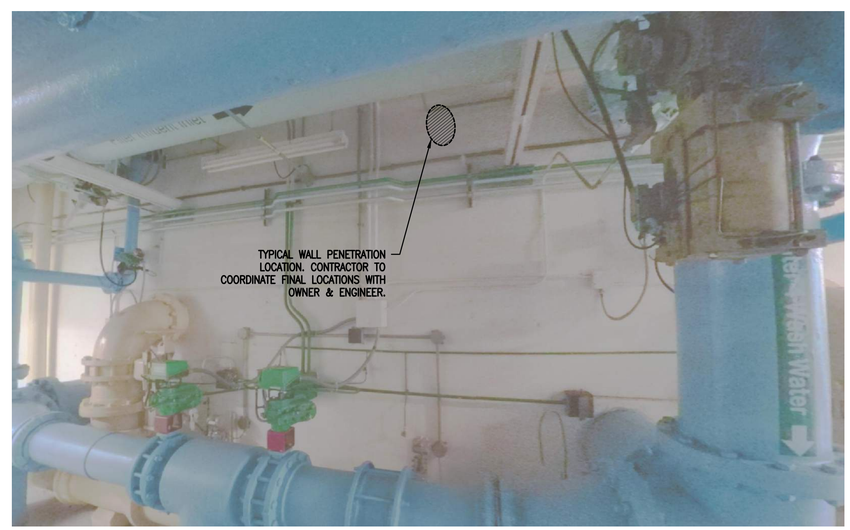

5 WALL PENETRATION LOCATION
NO SCALE

OHM
ARCHITECTS ENGINEERS PLANNERS
34000 Plymouth Road
Livonia, MI 48150
P (734) 522-6711 | F (734) 522-6427
OHM-ADVISORS.COM

REVISIONS:
ISSUED FOR BIDS 12/16/2019

DATE	PROJ NUMBER	ENG	PROJ MGR	CADD	COUNTY	CITY/VILLAGE/TOWNSHIP	SCALE	HORIZ DATUM	VERT DATUM
	0020-19-0040	MK	JD	LM	SHIAWASSEE	OWOSSO	H: V:	N/A	N/A

CITY OF OWOSSO
WASH WATER PUMP & PIPING REPLACEMENT
LOSS OF HEAD TRANSMITTERS

SHEET P-202

COPYRIGHT 2016 OHM ALL DRAWINGS AND WRITTEN MATERIALS APPEARING HEREIN CONSTITUTE THE ORIGINAL AND UNPUBLISHED WORK OF OHM AND THE SAME MAY NOT BE DUPLICATED, DISTRIBUTED, OR DISCLOSED WITHOUT PRIOR WRITTEN CONSENT OF OHM

DRAWING PATH: \\ahmdfs\corporate\Projects\0000_0100\0020\190040_wtp_design_services\Drawings\facilities\Sheets\190040P-203.dwg Dec 16, 2019 - 11:51am

NOTES:

1. CONTRACTOR MAY COORDINATE WITH WTP SUPERINTENDENT TO SHUTDOWN AND REMOVE PROPELLER METER TO FACILITATE ACCESS TO SUBBASEMENT THROUGH HATCH. PROPELLER METER MAY ONLY BE TAKEN OUT OF SERVICE WHILE ALL OTHER SUBBASEMENT PIPING IS IN SERVICE
2. CONTRACTOR MAY ELECT TO USE SHORTER PIPE SEGMENTS THAN WHAT IS SHOWN HERE SUBJECT TO APPROVAL BY ENGINEER. ALL CONNECTIONS SHALL BE FLANGED OR UTILIZE A RFCA. ADDITIONAL PIPE FLANGES OR RFCAS SHALL NOT INTERFERE WITH EXISTING CONCRETE PIPE SUPPORTS.
3. PROTECT EXISTING CONCRETE SUPPORTS FOR REUSE WITH PROPOSED PIPING UNLESS OTHERWISE INDICATED
4. REFER TO SUMMARY SPECIFICATION FOR SEQUENCE OF CONSTRUCTION
5. DETAIL 3 WAS ORIGINALLY PRODUCED BY CAPITAL CONSULTANTS FOR OWOSSO UNDER CONTRACT 93-147 EXISTING INFORMATION (LIGHT LINE WORK) HAS NOT BEEN VERIFIED.
6. CONTRACTOR TO MOUNT EXISTING PRESSURE SENSING TUBING TO CEILING OR WALLS. CONTRACTOR TO FIELD ROUTE.

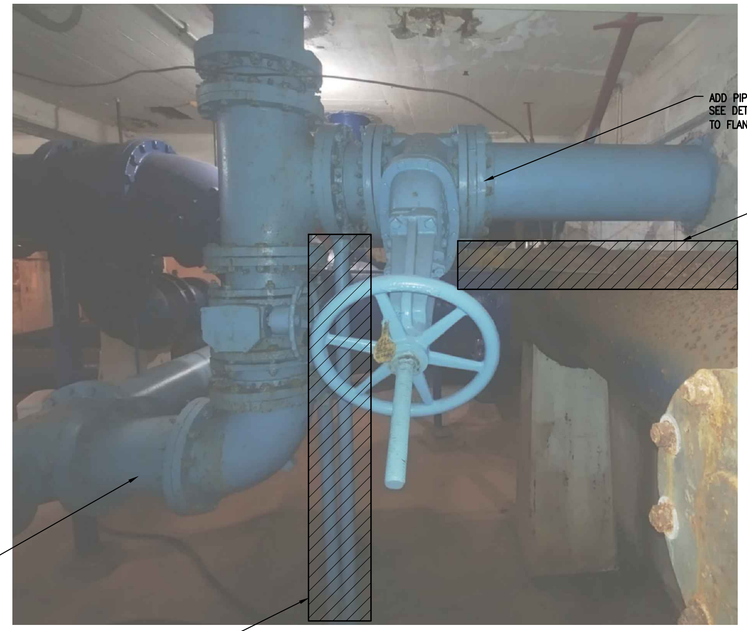

1 HIGH SERVICE SUCTION – PIPE SUPPORT REPLACEMENT
NO SCALE

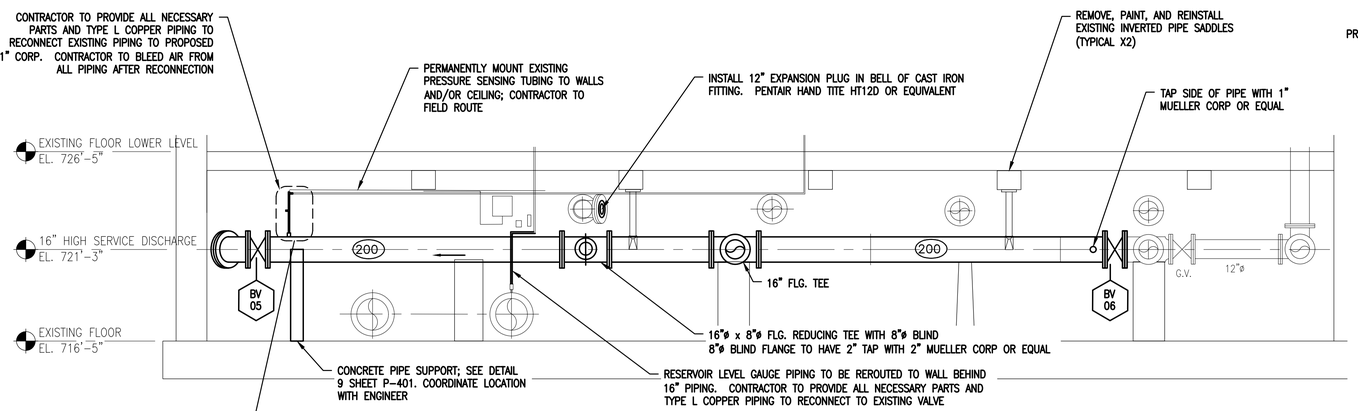

2 HIGH SERVICE PIPE ELEVATION
1/4" = 1'-0"

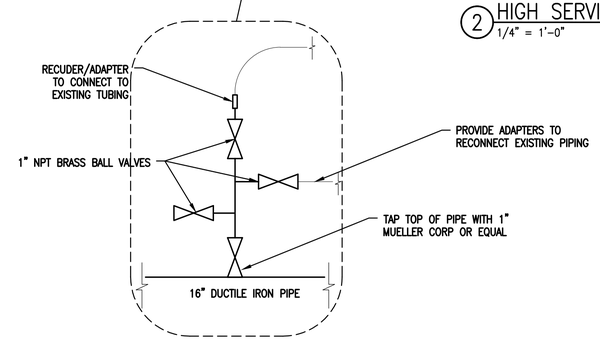

NOT TO SCALE

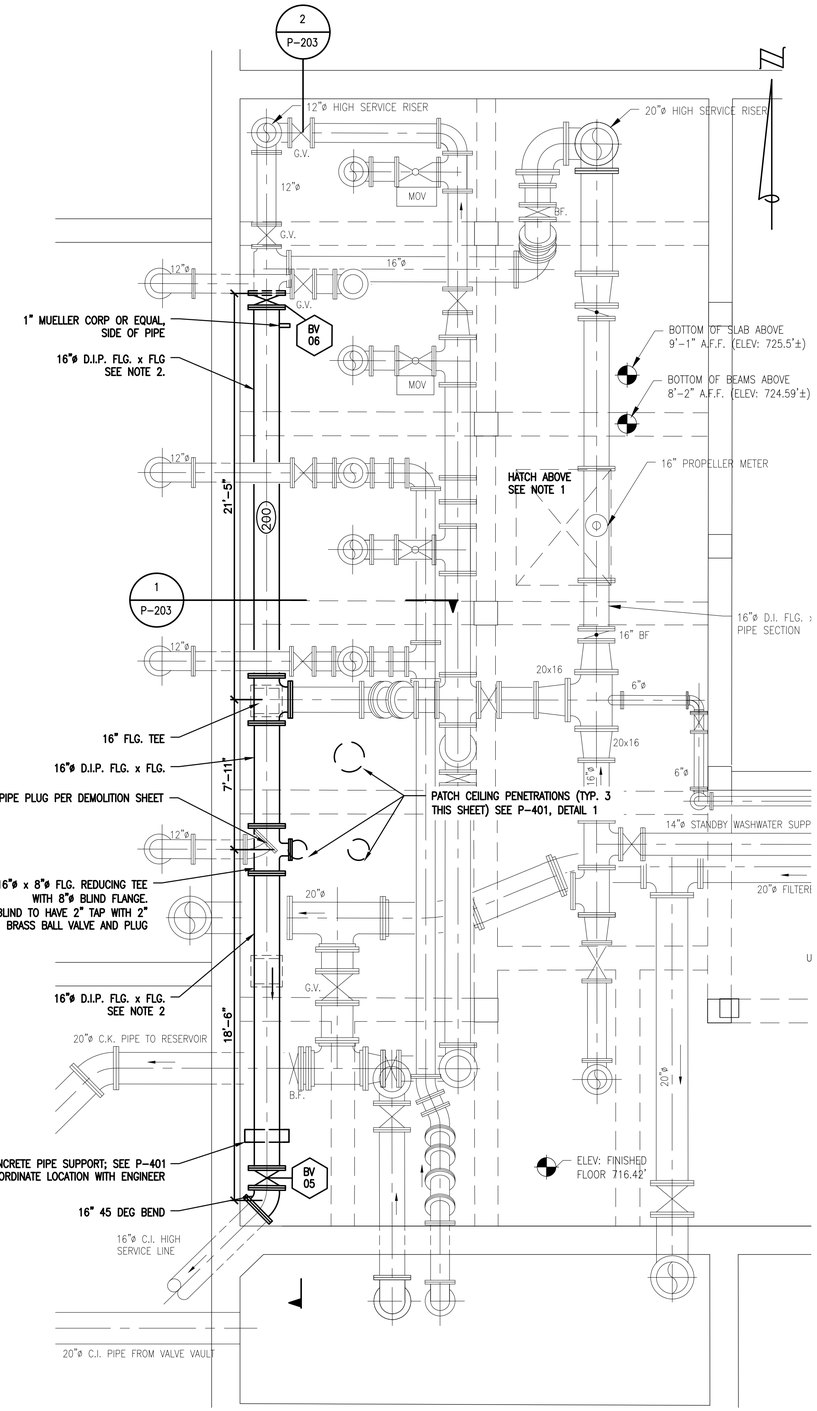

3 HIGH SERVICE PIPE PLAN
1/4" = 1'-0"

OHM
ARCHITECTS ENGINEERS PLANNERS
34000 Plymouth Road
Livonia, MI 48150
P (734) 522-6711 | F (734) 522-6427
OHM-ADVISORS.COM

REVISIONS:
ISSUED FOR BIDS 12/16/2019

DATE	PROJ NUMBER	ENG	PROJ MGR	CADD	COUNTY	CITY/VILLAGE/TOWNSHIP	SCALE	HORIZ DATUM	VERT DATUM
	0020-19-040	MK	JD	LM	SHIAWASSEE	OWOSSO	H: V:	N/A	N/A

CITY OF OWOSSO
WASH WATER PUMP & PIPING REPLACEMENT
HIGH SERVICE PIPE PLAN

SHEET P-203

COPYRIGHT 2016 OHM ALL DRAWINGS AND WRITTEN MATERIALS APPEARING HEREIN CONSTITUTE THE ORIGINAL AND UNPUBLISHED WORK OF OHM AND THE SAME MAY NOT BE DUPLICATED, DISTRIBUTED, OR DISCLOSED WITHOUT PRIOR WRITTEN CONSENT OF OHM

DRAWING PATH: \\ohm\dfs\corporate\Projects\0000_0100\0020190040_wtp_design_services\Drawings\facilities\Sheets\190040P-202.DWG Dec 16, 2019 - 12:21pm

VALVE SCHEDULE

MARK	LOCATION	SERVICE	SIZE (INCHES)	TYPE	JOINTS	OPERATOR	ACCESSORIES	REMARKS
CS-01	WASH WATER PUMP WWP-1 DISCHARGE	WASH WATER	14	DOUBLE DOOR CHECK	W	L		
CS-02	WASH WATER PUMP WWP-2 SUCTION DISCHARGE	WASH WATER	14	DOUBLE DOOR CHECK	W	L		
BV-01	WASH WATER PUMP WWP-1 SUCTION	WASH WATER	14	BUTTERFLY	FJ	H		
BV-02	WASH WATER PUMP WWP-1 DISCHARGE	WASH WATER	14	BUTTERFLY	FJ	H		
BV-03	WASH WATER PUMP WWP-2 SUCTION	WASH WATER	14	BUTTERFLY	FJ	H		
BV-04	WASH WATER PUMP WWP-2 DISCHARGE	WASH WATER	14	BUTTERFLY	FJ	H		
BV-05	16" HIGH SERVICE DISCHARGE	HIGH SERVICE	16	BUTTERFLY	FJ	H		REPLACE (DISPOSE OF EXISTING)
BV-06	16" HIGH SERVICE DISCHARGE	HIGH SERVICE	16	BUTTERFLY	FJ	H		
BV-07	WASH WATER SUCTION	WASH WATER	14	BUTTERFLY	FJ	H		
BV-08	HIGH SERVICE WASH WATER CONNECTION	HIGH SERVICE WASH WATER	12	BUTTERFLY	FJ	CW		
PRV-01	HIGH SERVICE CONNECTION TO WASH WATER DISCHARGE	HIGH SERVICE WASH WATER	12	GLOBE	FJ	–	POSITION INDICATOR, ANTI-CAVITATION TRIM	PRESSURE REDUCING AND CHECK VALVE FUNCTIONS

INSTRUMENTATION SCHEDULE

MARK	LOCATION	SERVICE	SIZE (INCHES)	TYPE	JOINTS	SCALE	ACCESSORIES	REMARKS
FM-0 [EXISTING]	WASH WATER PUMP DISCHARGE PIPING	WASH WATER	14	ORIFICE FLOW METER	W	0-5000 GPM		REMOVE AND DISPOSE OF EXISTING
FM-61	WASH WATER PUMP DISCHARGE PIPING	WASH WATER	14	MAGNETIC FLOW	FJ	0-6000 GPM	REMOTE TRANSMITTER W/MIN 60 FT CABLE	
PIT-61A	FILTER 1 DISCHARGE	FILTERED WATER	½" X 2	DIFFERENTIAL PRESSURE	SJ	0-14 FEET	LOOP POWERED REMOTE DISPLAY	
PIT-61B	FILTER 2 DISCHARGE	FILTERED WATER	½" X 2	DIFFERENTIAL PRESSURE	SJ	0-14 FEET	LOOP POWERED REMOTE DISPLAY	
PIT-61C	FILTER 3 DISCHARGE	FILTERED WATER	½" X 2	DIFFERENTIAL PRESSURE	SJ	0-14 FEET	LOOP POWERED REMOTE DISPLAY	
PIT-61D	FILTER 4 DISCHARGE	FILTERED WATER	½" X 2	DIFFERENTIAL PRESSURE	SJ	0-14 FEET	LOOP POWERED REMOTE DISPLAY	

PUMP SCHEDULE

MARK	LOCATION	DUTY POINT	MOTOR SIZE	INLET PIPING	OUTLET PIPING	STYLE	REMARKS
WWP-1	FILTER PIPE GALLERY	4700 GPM @ 38' TDH	60 HP	14"	14"	HORIZONTAL END SUCTION	SEE SHEET P-201 FOR ALTERNATE FLANGE SIZE OPTION
WWP-2	COMPRESSOR ROOM	4700 GPM @ 38' TDH	60 HP	14"	14"	HORIZONTAL END SUCTION	SEE SHEET P-201 FOR ALTERNATE FLANGE SIZE OPTION

EXPOSED PIPING SCHEDULE

MARK	LOCATION	SERVICE	SIZE (INCHES)	MATERIALS	JOINTS	TEST PRESSURE (PSIG)
100	WATER TREATMENT PLANT LOWER LEVEL	WASH WATER	14	DIP	FJ	60
200	WATER TREATMENT PLANT SUBBASEMENT	HIGH SERVICE DISCHARGE	16	DIP	FJ	150

VALVE JOINT

BSL BELL AND SPIGOT LEAD
FJ FLANGED JOINT
GC GROOVED COUPLING
MJ MECHANICAL JOINT
POJ PUSH-ON JOINT
SJ SCREWED JOINT
W WAFER
RFCA RESTRAINED FLANGED COUPLING ADAPTER

OPERATOR

BG BEVEL GEAR
C CRANK/HANDLES
CL CHAIN LEVER (LENGTH)
CW CHAIN WHEEL (LENGTH)
H HANDWHEEL
HO HYDRAULIC OIL
HW HYDRAULIC WATER
IL INFINITE LEVER
L LEVER
M MOTOR
P POSITIONER
PL POSITION LEVEL
POC PNEUMATIC CYLINDER
POD PNEUMATIC DIAPHRAGM
W WRENCH HEAD
WN WRENCH NUT

SLUICE GATE

TYPE
C CONVENTIONAL
SC SELF CONTAINED

BOTTOM
FB FLUSH BOTTOM
SB STANDARD BOTTOM

FRAME
FF FLAT FRAME
FLF FLANGE FRAME

ACCESSORIES

BS BENCH STANDS
CP CONTROL PACKAGE
EB EXTENSION BONNET (LENGTH)
ES EXTENSION STEM SHAFT (LENGTH)
FB FLOOR BOX (LENGTH)
FS FLOOR STAND
LS LIMIT SWITCH
MS MANUAL SCREW
OAS OIL ACCUMULATOR SYSTEM
PA PILOT ASSEMBLY
PI POSITION INDICATOR
PO PORTABLE OPERATOR
RPI REMOTE POSITION INDICATOR
SC STEM COVER
SG STEM GUIDE
THW "T" HANDLE WRENCH
VB VALVE BOX (LENGTH)
WB WALL BRACKET
WG WORM GEAR

REMARKS

CL CLASS
FC FAIL CLOSE
FO FAIL OPEN
GB GROUND BURIED
NRS NONRISING STEM
OS OPEN SHUT
RS RISING STEM
TH THROTTLING TYPE

SLIDE GATE TYPE

A ALUMINUM
FG FIBERGLASS
SS STAINLESS STEEL FRAME

PIPEWORK SCHEDULE KEY

GENERAL

THE FOLLOWING PIPE SCHEDULE GIVES THE DESIGNATION FOR EACH PIPE LINE, PIPE SIZE, JOINT, MATERIAL, SERVICE AND OTHER PERTINENT DATA. THE KEY OF SYMBOLS FOR THE SCHEDULE IS AS FOLLOWS: PIPE MATERIAL

PROCESS PIPING

BSP BLACK STEEL PIPE
CSIP CHROME SILICON IRON PIPE
DIP DUCTILE IRON PIPE
FRP FIBERGLASS REINFORCED PIPE
GSP GALVANIZED STEEL PIPE
HDP HIGH DENSITY POLYETHYLENE
PVC PLASTIC PIPE
PCCP PRESTRESSED CONCRETE CYLINDER PIPE
RCPP REINFORCED CONCRETE PRESSURE PIPE
SSP STAINLESS STEEL PIPE
SPP STEEL PLATE PIPE
HSP HIGH PRESSURE STEEL PIPE

REMARKS

CL CLASS

PIPE JOINTS

AFC ADAPTER FLANGE COUPLING
BFC BOLTED FLEXIBLE COUPLING
BSC BELL AND SPIGOT CONCRETE
BSL BELL AND SPIGOT LEAD
BSS BELL AND SPIGOT STEEL
FJ FLANGED JOINT
GC GROOVED COUPLING
MJ MECHANICAL JOINT
POJ PUSH-ON JOINT
SJ SCREWED JOINT
STJ SOCKET TYPE JOINT
WJ WELDED JOINT
FWJ FIELD WELDED JOINT

OHM
ARCHITECTS ENGINEERS PLANNERS
34000 Plymouth Road
Livonia, MI 48150
P (734) 522-6711 | F (734) 522-6427
OHM-ADVISORS.COM

REVISIONS:
ISSUED FOR BIDS 12/16/2019

DATE	PROJ NUMBER	ENG	PROJ MGR	CADD	COUNTY	CITY/VILLAGE/TOWNSHIP	SCALE	HORIZ DATUM	VERT DATUM
	0020-19-0040	MK	JD	LM	SHIAWASSEE	OWOSSO	H: V:	N/A	N/A

CITY OF OWOSSO
WASH WATER PUMP & PIPING REPLACEMENT
PUMP, VALVE & PIPE SCHEDULES

SHEET P-301

COPYRIGHT 2016 OHM ALL DRAWINGS AND WRITTEN MATERIALS APPEARING HEREIN CONSTITUTE THE ORIGINAL AND UNPUBLISHED WORK OF OHM AND THE SAME MAY NOT BE DUPLICATED, DISTRIBUTED, OR DISCLOSED WITHOUT PRIOR WRITTEN CONSENT OF OHM

DRAWING PATH: \\ohmdfs\corporate\Projects\0000_0100\0020\190040_wtp_design_services\Drawings\facilities\Sheets\180040P-301 & 401.dwg Dec 16, 2019 - 12:22pm

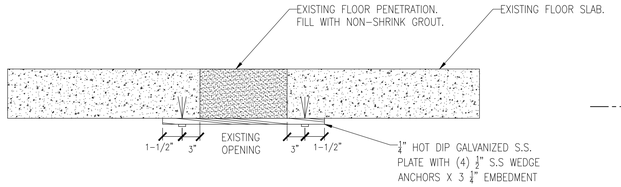

1 FLOOR PENETRATION REPAIR DETAIL
NOT TO SCALE

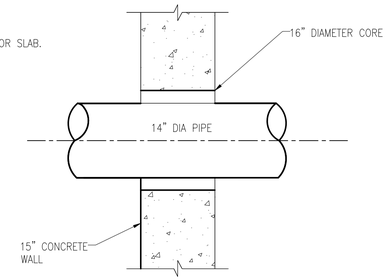

NOTES:

1. COAT ANY EXPOSED RE-STEEL WITH APPROVED EPOXY.

2 WALL PENETRATION DETAIL
NOT TO SCALE

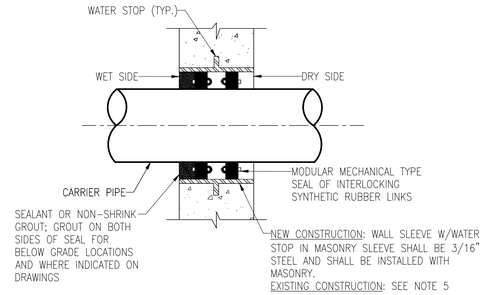

NOTES:

1. CONCRETE SHALL BE WORKED IN AND VIBRATED TO ELIMINATE ALL VOIDS IN CONCRETE. IF VOIDS DO REMAIN, FILL WITH GROUT BEFORE INSTALLING PIPE AND SEALS.
2. NUTS TO FACE DRY SIDE (INTERIOR) TO ALLOW FUTURE ADJUSTMENTS.
3. PROVIDE ONE SEAL FOR WALLS LESS THAN 12" THICK AND TWO SEALS FOR WALLS 12" THICK AND GREATER
4. IF BOTH SIDES ARE WET, GROUT OR SEALANT IS NOT REQUIRED, UNLESS OTHERWISE NOTED.
5. IF CONCRETE WALL IS EXISTING, THEN CORE DRILL WALL SMOOTH AND PROVIDE EPOXY BONDING AGENT AT CORE PERIMETER. CORE DRILL A 2" MIN. (TYP.) OFFSET FROM PIPE OD. WALL SLEEVE NOT REQUIRED UNLESS OTHERWISE NOTED.
6. MECHANICAL SEALS AND NON-SHRINK GROUT MUST BE NSF 61 CERTIFIED.

3 WALL PENETRATION – MECHANICAL SEAL
NOT TO SCALE

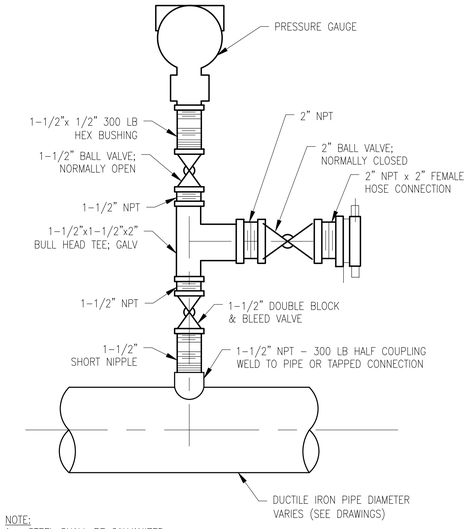

NOTE:

1. STEEL SHALL BE GALVANIZED.
2. PRESSURE TRANSDUCER TAP SHALL BE LOCATED 45° FROM PIPE VERTICAL AXIS.
3. SUPPORT PRESSURE TRANSDUCER VIA MANUFACTURER-APPROVED PIPE BRACKETS TO DI PIPE.

4 PRESSURE GAUGE TAP DETAIL
NOT TO SCALE

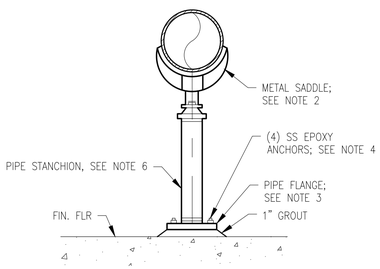

NOTES:

1. FOR PIPE DIAMETERS 2-1/2" TO 36"
2. METAL SADDLE SHALL BE GRINNELL FIGURE 264 OR EQUAL
3. PIPE FLANGE SHALL BE CLASS 150 STEEL SLIP-ON FLANGE, FLAT FACED. SIZED TO MATCH STANCHION PIPE.
4. ANCHORS SHALL BE EMBEDDED MIN. OF 4". SIZE ANCHOR PER PIPE SUPPORT DIAMETER AND SADDLE MANUFACTURER RECOMMENDATIONS.
5. MAX SPACING BETWEEN SUPPORTS IS 20' OR AS DEPICTED ON CONTRACT DRAWINGS.
6. INSTALL ANVIL FIGURE 63, TYPE T OR EQUAL. SELECT STANCHION SIZE APPROPRIATE FOR PIPE SIZE AND HEIGHT REQUIREMENTS.

5 ADJUSTABLE SUPPORT
NOT TO SCALE

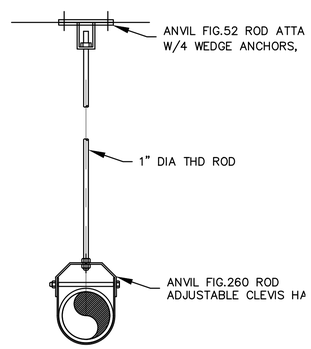

6 PIPE SUPPORT HANGER DETAIL
NOT TO SCALE

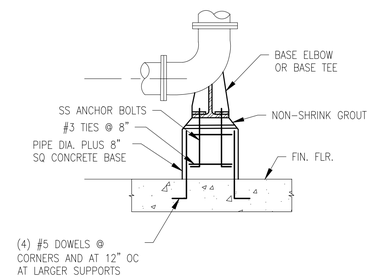

NOTES:

1. FOR PIPE DIAMETERS 2-1/2" TO 36" FOR EXIST. FLOORS DRILL AND ANCHOR STRAIGHT DOWELS WITH EPOXY ADHESIVE. PROVIDE 6" MIN. EMBEDMENT IN EXISTING SLAB

7 PIPE SUPPORT BASE ELBOW DETAIL
NOT TO SCALE

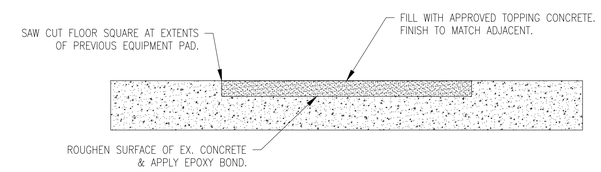

8 CONCRETE FLOOR PATCH DETAIL
NOT TO SCALE

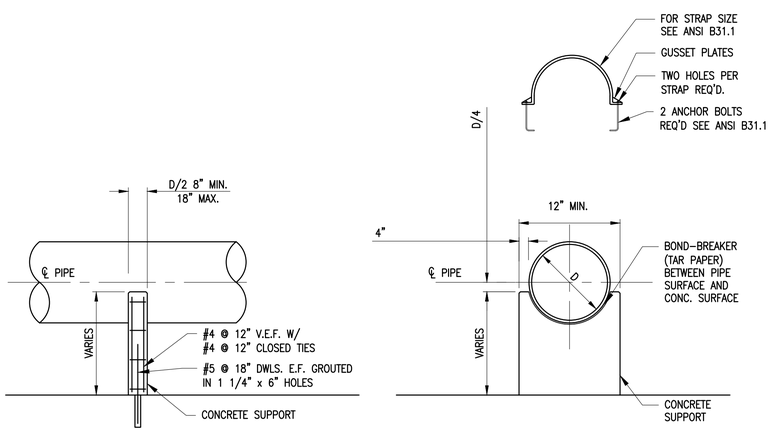

9 PIPE SUPPORT CONCRETE DETAIL
NOT TO SCALE

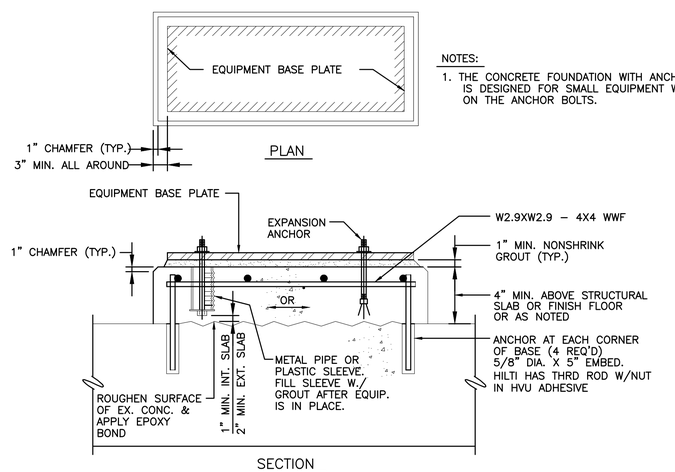

NOTES:

1. THE CONCRETE FOUNDATION WITH ANCHOR BOLTS SHOWN IS DESIGNED FOR SMALL EQUIPMENT WITHOUT TENSION FORCES ON THE ANCHOR BOLTS.

10 EQUIPMENT PAD DETAIL
NOT TO SCALE

OHM
ARCHITECTS ENGINEERS PLANNERS
34000 Plymouth Road
Livonia, MI 48150
P (734) 522-6711 | F (734) 522-6427
OHM-ADVISORS.COM

REVISIONS:

ISSUED FOR BIDS 12/16/2019

DATE	PROJ NUMBER	ENG	PROJ MGR	CADD	COUNTY	CITY/VILLAGE/TOWNSHIP	SCALE	HORIZ DATUM	VERT DATUM
	0020-19-0040	MK	JD	LM	SHIAWASSEE	OWOSSO	H: V:	N/A	N/A

CITY OF OWOSSO
WASH WATER PUMP & PIPING REPLACEMENT

DETAILS

SHEET P-401

COPYRIGHT 2019 OHM ALL DRAWINGS AND VIRITTEN MATERIALS APPEARING HEREIN CONSTITUTE THE ORIGINAL AND UNPUBLISHED WORK OF OHM AND THE SAME MAY NOT BE DUPLICATED, DISTRIBUTED, OR DISCLOSED WITHOUT PRIOR WRITTEN CONSENT OF OHM

DRAWING PATH: \\ohmdfs\corporate\Projects\0000_0100\0020190040_wtp_design_services\Drawings\facilities\Sheets\180040P-301 & 401.dwg Dec 16, 2019 - 11:52am

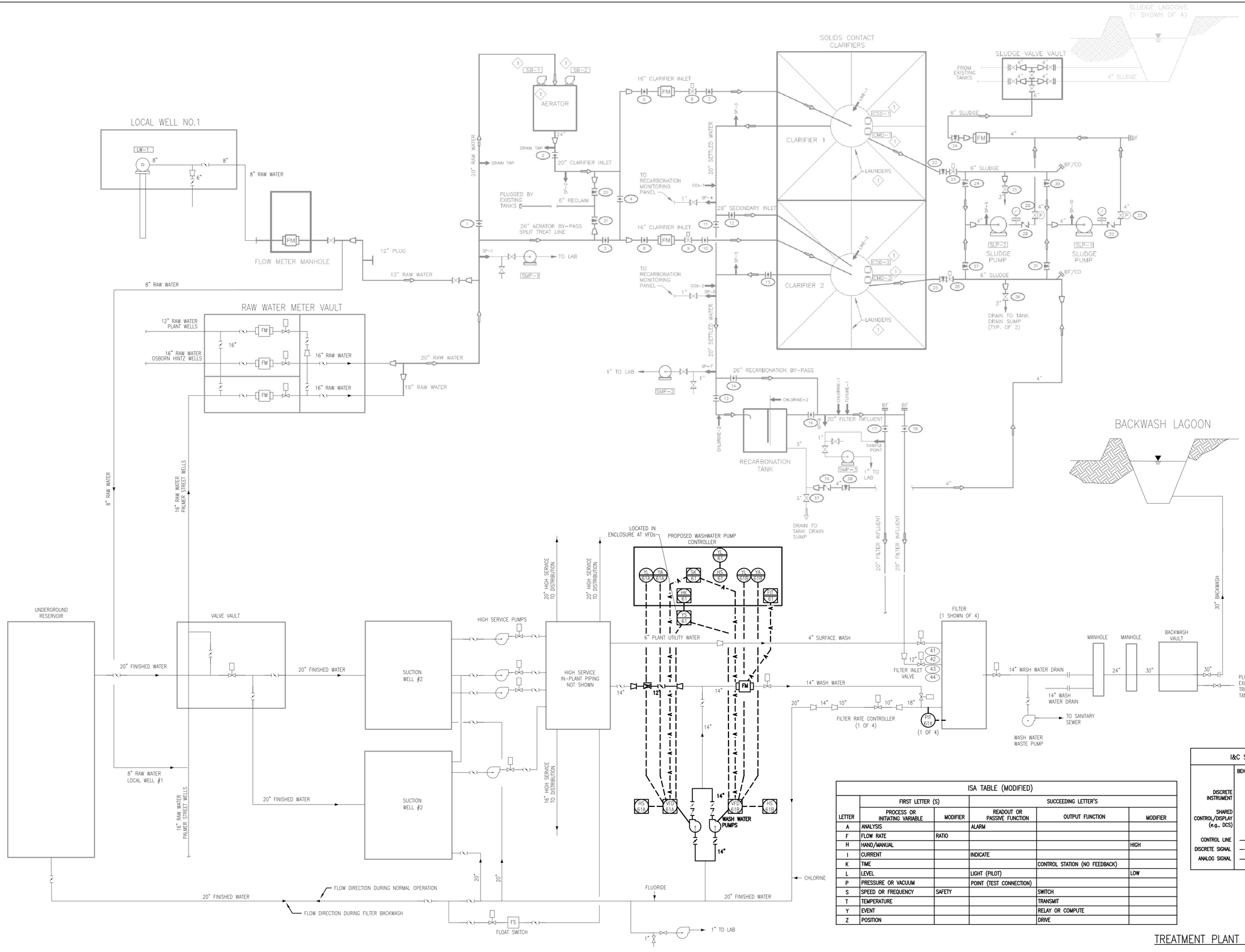

ISA TABLE (MODIFIED)					
	FIRST LETTER (S)		SUCCEEDING LETTER'S		
LETTER	PROCESS OR INITIATING VARIABLE	MODIFIER	READOUT OR PASSIVE FUNCTION	OUTPUT FUNCTION	MODIFIER
A	ANALYSIS		ALARM		
F	FLOW RATE	RATIO			
H	HAND/MANUAL				HIGH
I	CURRENT		INDICATE		
K	TIME			CONTROL STATION (NO FEEDBACK)	
L	LEVEL		LIGHT (PILOT)		LOW
P	PRESSURE OR VACUUM		POINT (TEST CONNECTION)		
S	SPEED OR FREQUENCY	SAFETY		SWITCH	
T	TEMPERATURE			TRANSMIT	
Y	EVENT			RELAY OR COMPUTE	
Z	POSITION			DRIVE	

I&C SYMBOL LEGEND	BEHIND CONTROL PANEL	IN THE FIELD	ON LOCAL CONTROL PANEL
DISCRETE INSTRUMENT	XX/XX	XX/XX	XX/XX
SHARED CONTROL/DISPLAY (e.g., DCS)	XX/XX	XX/XX	XX/XX
CONTROL LINE	———		
DISCRETE SIGNAL	— — —		
ANALOG SIGNAL	—A—		

TREATMENT PLANT P&ID

OHM
ARCHITECTS ENGINEERS PLANNERS
34000 Plymouth Road
Livonia, MI 48150
P (734) 522-6711 | F (734) 522-6427
OHM-ADVISORS.COM

REVISIONS:
ISSUED FOR BIDS 12/16/2019

DATE	PROJ NUMBER	ENG	PROJ MGR	CADD	COUNTY	CITY/VILLAGE/TOWNSHIP	H:	SCALE	V:	HORIZ DATUM	VERT DATUM
	0020-19-0040	MK	JD	LM	SHIAWASSEE	OWOSSO	NTS		NTS	N/A	N/A

CITY OF OWOSSO
WASH WATER PUMP & PIPING REPLACEMENT
PROPOSED PIPING AND INSTRUMENTATION DIAGRAM

SHEET I-101

COPYRIGHT 2016 OHM ALL DRAWINGS AND WRITTEN MATERIALS APPEARING HEREIN CONSTITUTE THE ORIGINAL AND UNPUBLISHED WORK OF OHM AND THE SAME MAY NOT BE DUPLICATED, DISTRIBUTED, OR DISCLOSED WITHOUT PRIOR WRITTEN CONSENT OF OHM

DRAWING PATH: \\ohm\dfs\Corporate\Projects\0000_0100\0020190040_wtp_design_services\Drawings\facilities\Sheets\1900409-101A.DWG Dec 16, 2019 - 11:52am

ELEC. ABBREVIATIONS

_SPECIAL	
ø	PHASE
A	
A	AMPERE
AFF	ABOVE FINISHED FLOOR
C	
C	CONDUIT
CAT	CATALOGUE
CB	CIRCUIT BREAKER
CMU	CONCRETE MASONRY UNIT
CO.	COMPANY
CUH	CABIN UNIT HEATER
E	
EC	ELECTRICAL CONTRACTOR
EF	EXHAUST FAN
EWC	ELECTRIC WATER COOLER
F	
FA	FIRE ALARM
G	
GFCI	GROUND FAULT CIRCUIT INTERRUPTER
GND	EQUIPMENT GROUND
H	
HID	HIGH INTENSITY DISCHARGE
HPS	HIGH PRESSURE SODIUM
HVAC	HEATING VENTILATION & AIR CONDITIONING
K	
K	KEY OPERATED DEVICE
KVA	KILOVOLT–AMPERES
KW	KILO–WATTS
L	
LED	LIGHT EMITTING DIODE
M	
MCB	MAIN CIRCUIT BREAKER
MDP	MAIN DISTRIBUTION PANEL
MH	METAL HALIDE
MISC	MISCELLANEOUS
MLO	MAIN LUG ONLY
MTD	MOUNTED
N	
NEU	NEUTRAL
NO	NUMBER
P	
PL	PILOT
R	
RECP	RECEPTACLE
T	
TEL	TELEPHONE
TRANS	TRANSFORMER
TV	TELEVISION
TYP	TYPICAL
U	
UGE	UNDERGROUND ELECTRIC
UH	UNIT HEATER
UNO	UNLESS NOTED OTHERWISE
V	
V	VOLT
VA	VOLT–AMPERES
W	
W	WIRE
WNC	WIRELESS NETWORK CONTROLLER
WP	WEATHERPROOF

GENERAL NOTES - ELECTRICAL

1. ALL ELECTRICAL INSTALLATIONS SHALL BE IN ACCORDANCE WITH THE CURRENT NATIONAL ELECTRICAL CODE AND ANY STATE/LOCAL AMENDMENTS.
2. THE ELECTRICAL CONTRACTOR SHALL BE RESPONSIBLE FOR THE ACQUISITION OF AN ELECTRICAL PERMIT AND SCHEDULING OF THE NECESSARY INSPECTIONS. UPON COMPLETION OF THE WORK THE ELECTRICAL CONTRACTOR SHALL PROVIDE THE OWNER EVIDENCE OF INSPECTION APPROVAL.
3. THE ELECTRICAL CONTRACTOR SHALL BE RESPONSIBLE FOR ALL COORDINATION REQUIRED WITH THE ELECTRIC UTILITY SERVING THE FACILITY. UTILITY COSTS SHALL BE PAID SEPARATELY BY THE OWNER.

ELECTRICAL LEGEND

LIGHT FIXTURES

- SURFACE / CEILING MOUNT
- EMERGENCY SURFACE / CEILING MOUNT
- PENDANT / CHAIN MOUNT
- EMERGENCY PENDANT / CHAIN MOUNT
- RECESSED MOUNT
- EMERGENCY RECESSED MOUNT
- TRACK STRIP
- (INT.) (EXT.) WALL MOUNT
- (INT.) (EXT.) EMERGENCY WALL MOUNT
- EXTERIOR POLE MOUNT
- EXTERIOR POST MOUNT
- INTERIOR EMERGENCY WALL PACK
- (WALL) (CEILING) EXIT SIGN
- (LIGHT) (NO LIGHT) CEILING FAN

POWER DISTRIBUTION

- DISCONNECT SWITCH
- FUSED DISCONNECT SWITCH
- MOTOR STARTER DISCONNECT SWITCH
- MOTOR STARTER
- M ELECTRICAL METER
- DP ## DISTRIBUTION PANEL
- P ## ELECTRICAL POWER PANEL SURFACE MOUNT
- P ## ELECTRICAL POWER PANEL FLUSH MOUNT
- R RELAY
- T ELECTRICAL TRANSFORMER
- PB ELECTRICAL PULL BOX
- VARIABLE FREQUENCY DRIVE
- J (CEILING) J (WALL) J (FLOOR) JUNCTION BOX
- SINGLE PHASE MOTOR
- THREE PHASE MOTOR

RECEPTACLE OUTLETS

- SIMPLEX RECEPTACLE
- DUPLEX GROUNDED RECEPTACLE
  - CTR MOUNTED ABOVE COUNTER
  - G GFCI
  - GC GFCI – MOUNTED ABOVE COUNTER
  - U DUAL USB PORTS
  - UC DUAL USB PORTS ABOVE COUNTER
  - WP WEATHERPROOF COVER W/ GFCI
  - T TAMPERPROOF
  - TC TAMPERPROOF ABOVE COUNTER
  - TGC TAMPERPROOF GFCI ABOVE COUNTER
- 208V, 1ø STRAIGHT BLADE RECEPTACLE
  - D DRYER RECEPTACLE
  - R RANGE RECEPTACLE
- QUADRUPLEX RECEPTACLE
- DUPLEX RECEPT ON EMERGENCY POWER
- FLOOR BOX
- 3ø RECEPTACLE

SWITCH OUTLETS

SWITCHES: X = DESIGNATION BELOW
Z = ZONE DESIGNATION

- SINGLE POLE
- 2 TWO POLE
- 3 THREE WAY
- 4 FOUR WAY
- DM DIMMER
- F FAN
- K KEY OPERATED
- LV LOW VOLTAGE
- M MOTION DETECTION
- P PILOT LIGHT
- T TIMER

SENSORS: X = DESIGNATION BELOW

- CEILING WALL
  - D DAYLIGHT
  - O OCCUPANCY
  - V VACANCY
- PB PUSH BUTTON SWITCH
- PC PHOTOCELL
- CEILING MOUNTED PULL SWITCH
- WIRELESS NETWORK LIGHTING CONTROLLER
  XX = CONTROLLER INDICATOR

SECURITY

- CR CARD READER
- DC MAGNETIC SWITCH (DOOR CONTACT)
- DL ELECTRONIC DOOR LOCK
- DO MOTORIZED DOOR OPERATOR
- ES ELECTRIC STRIKE
- K KEYPAD ENTRY DEVICE
- CEILING WALL SECURITY CAMERA

FIRE ALARM SYSTEM

- OUTDOOR BELL / CHIME
- S SMOKE DETECTOR
- S A SMOKE DETECTOR WITH AUDIBLE BASE
- S CO SMOKE/CARBON MONOXIDE DETECTOR
- DUCT SMOKE DETECTOR
- HD HEAT DETECTOR
- CEILING WALL
  - FIRE ALARM HORN/STROBE
  - FIRE ALARM STROBE
  - F FIRE ALARM HORN
  - F FIRE ALARM SPEAKER/STROBE
  - F FIRE ALARM SPEAKER
- F FIRE ALARM PULL STATION
- DH ELECTRO./MAG DOOR HOLD OPEN
- ELR END OF LINE RESISTOR
- FS FIRE ALARM FLOW SWITCH
- PS FIRE ALARM PRESSURE SWITCH
- TS FIRE ALARM TAMPER SWITCH
- FAA FIRE ALARM ANNUNCIATOR PANEL
- FACP FIRE ALARM CONTROL PANEL
- HSS HOOD SUPPRESSION SYSTEM FIRE ALARM CONTACT

TELEPHONE/COMMUNICATIONS

CEILING WALL FLOOR FURNITURE

NX=NUMBER AND TYPE OF PORTS
- C COAXIAL PORT
- D DATA PORT
- P PHONE PORT
- W WIRELESS ACCESS POINT
- N = 1,2,3,4

CEILING WALL
- SPEAKER
- IC INTERCOM CALL BOX
- VC ENTRANCE CALL SYSTEM
- B BELL
- M MICROPHONE JACK
- PS POWER SUPPLY
- WG REQUIRES WIRE GUARD
- NURSE NURSE CALL MAIN PANEL
- N NURSE CALL PULL STATION
- N NURSE CALL LIGHT
- C CLOCK

RACEWAY NOTES

1. MINIMUM SIZE OF RIGID CONDUIT SHALL BE 3/4".
2. MINIMUM SIZE OF FLEX CONDUIT SHALL BE 1/2".
3. MINIMUM SIZE WALL BOX IN CMU SHALL BE 4"X4".
4. MINIMUM SIZE OF UNDERGROUND CONDUIT SHALL BE 1 1/4"

WIRES

	PROPOSED	EXISTING	DEMOLISH
POWER CIRCUIT WIRING			
UNDERGROUND WIRING			
SWITCH LOOP WIRING			
UN–SWITCHED HOT WIRING			
LOW VOLTAGE WIRING			
DATA WIRING			

OHM
ARCHITECTS ENGINEERS PLANNERS
34000 Plymouth Road
Livonia, MI 48150
P (734) 522-6711 | F (734) 522-6427
OHM-ADVISORS.COM

REVISIONS:
ISSUED FOR BIDS 12/16/2019

DATE	PROJ NUMBER	ENG	PROJ MGR	CADD	COUNTY	CITY/VILLAGE/TOWNSHIP	SCALE		HORZ DATUM	VERT DATUM
	0020-19-040	MK	JD	LM	SHIAWASSEE	OWOSSO	H: NTS	V: NTS	N/A	N/A

CITY OF OWOSSO
WASH WATER PUMP & PIPING REPLACEMENT
GENERAL ELECTRICAL INFORMATION

SHEET E-001

COPYRIGHT 2019 OHM ALL DRAWINGS AND WRITTEN MATERIALS APPEARING HEREIN CONSTITUTE THE ORIGINAL AND UNPUBLISHED WORK OF OHM AND THE SAME MAY NOT BE DUPLICATED, DISTRIBUTED, OR DISCLOSED WITHOUT PRIOR WRITTEN CONSENT OF OHM

DRAWING PATH: \\ohmdfs\Corporate\Projects\0000_0100\0020190040_wtp_design_services\Drawings\facilities\Sheets\190040E-001.DWG Dec 16, 2019 - 11:52am

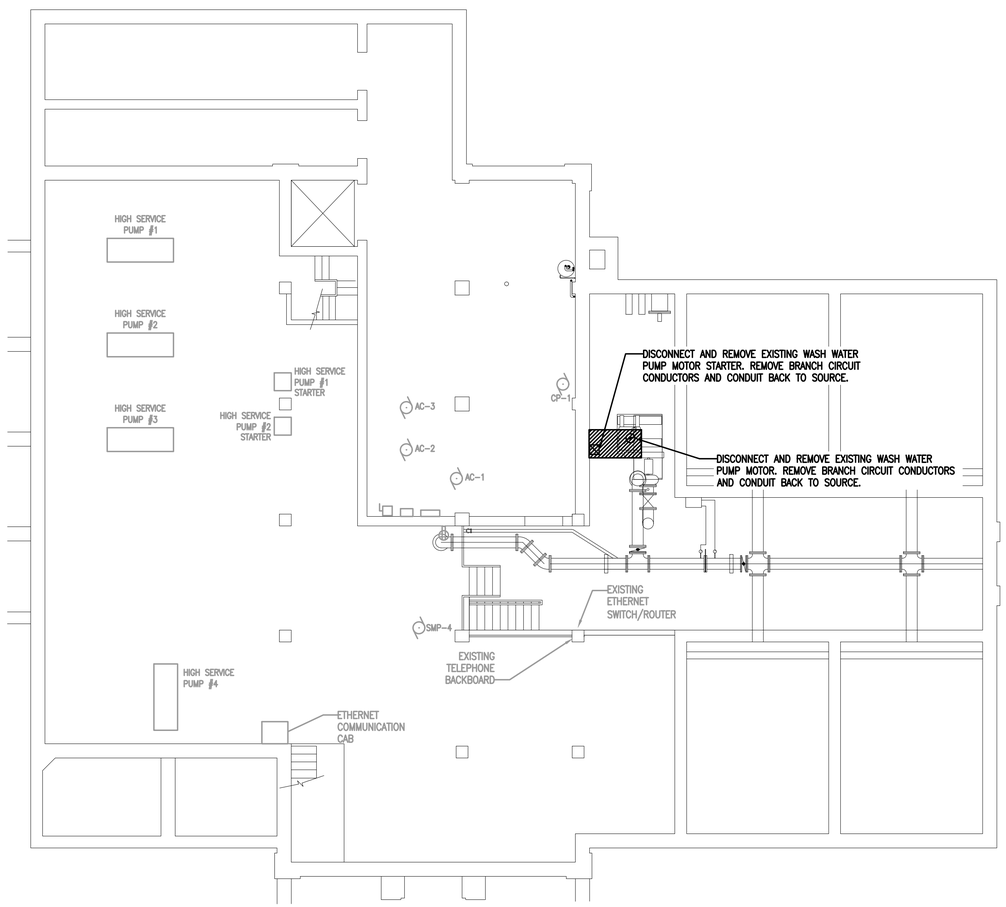

1 **LOWER LEVEL AND WELL HOUSE DEMOLITION POWER PLANS - ELEVATION 732.42'**
1/8" = 1'-0"

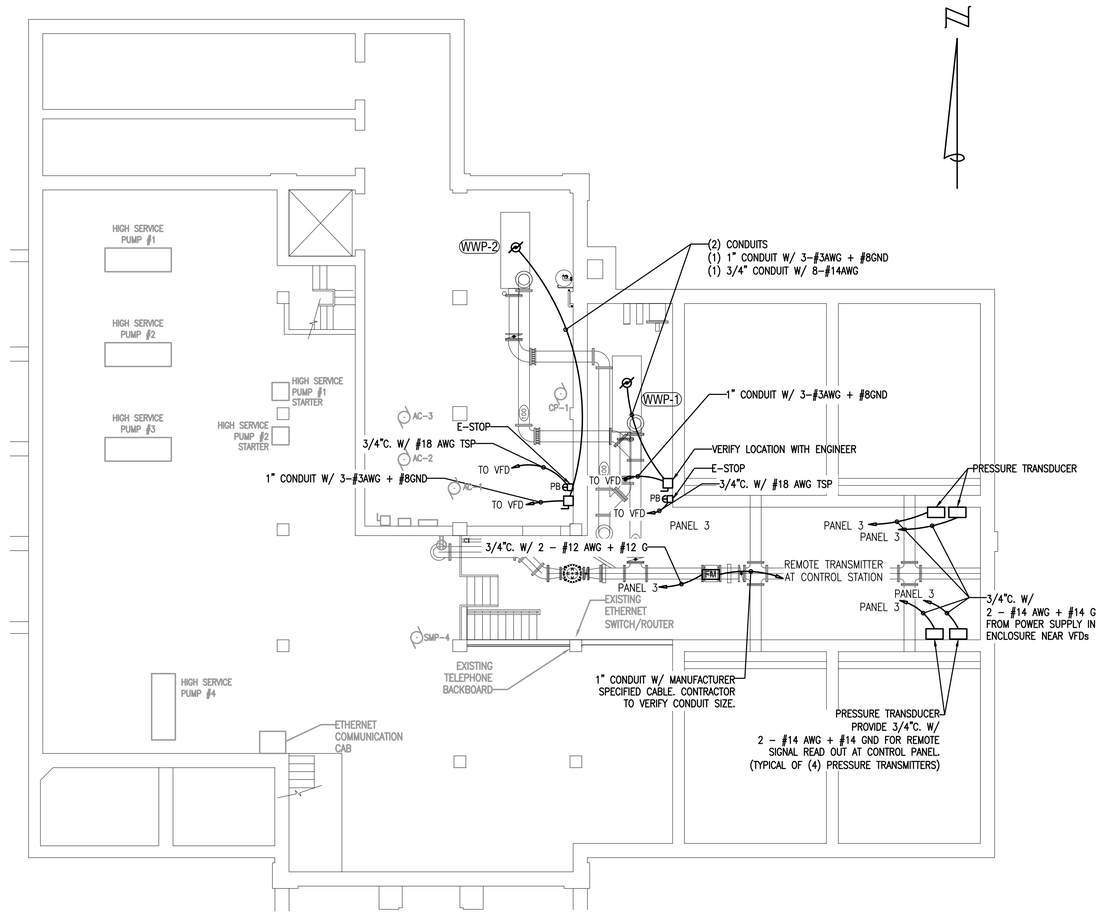

1 **PROPOSED LOWER LEVEL AND WELL HOUSE POWER PLANS - ELEVATION 732.42'**
1/8" = 1'-0"

OHM
ARCHITECTS ENGINEERS PLANNERS
34000 Plymouth Road
Livonia, MI 48150
P (734) 522-6711 | F (734) 522-6427
OHM-ADVISORS.COM

REVISIONS

ISSUED FOR BIDS	12/16/2019

DATE	PROJ NUMBER	ENG	PROJ MGR	CADD	COUNTY	CITY/VILLAGE/TOWNSHIP	SCALE			HORIZ DATUM	VERT DATUM
	0020-19-0040	MK	JD	LM	SHIAWASSEE	OWOSSO	H: NTS	V: NTS		N/A	N/A

CITY OF OWOSSO
WASH WATER PUMP & PIPING REPLACEMENT
LOWER LEVEL AND WELL HOUSE POWER PLANS

SHEET E-201

COPYRIGHT 2016 OHM ALL DRAWINGS AND WRITTEN MATERIALS APPEARING HEREIN CONSTITUTE THE ORIGINAL AND UNPUBLISHED WORK OF OHM AND THE SAME MAY NOT BE DUPLICATED, DISTRIBUTED, OR DISCLOSED WITHOUT PRIOR WRITTEN CONSENT OF OHM

DRAWING PATH: \\ohm\dfs\Corporate\Projects\0000_0100\0020190040_wtp_design_services\Drawings\facilities\Sheets\1900406E-201.DWG Dec 16, 2019 - 11:52am

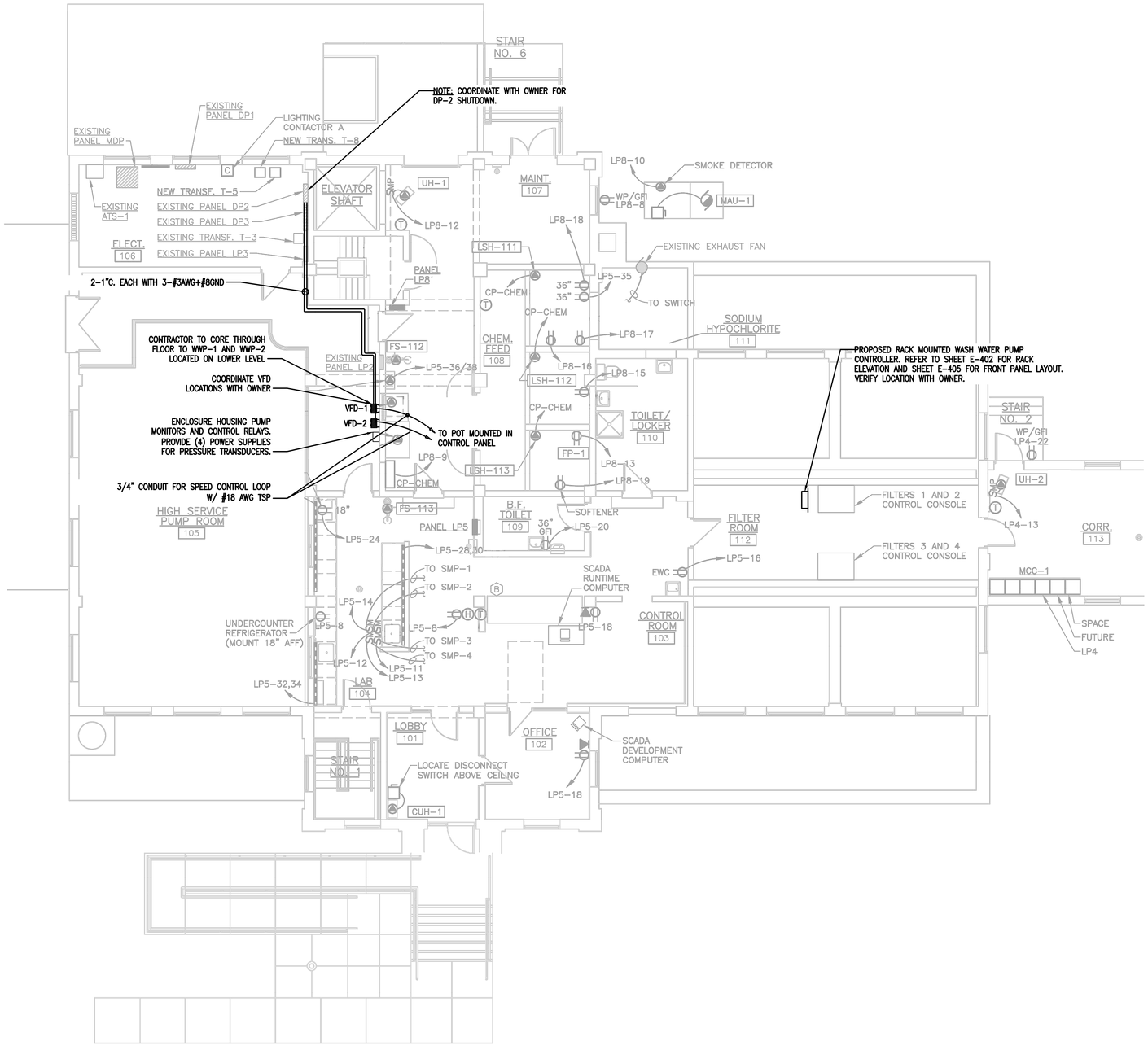

1 **UPPER LEVEL POWER PLAN**
1/8" = 1'-0"

OHM
ARCHITECTS ENGINEERS PLANNERS
34000 Plymouth Road
Livonia, MI 48150
P (734) 522-6711 | F (734) 522-6427
OHM-ADVISORS.COM

REVISIONS:

ISSUED FOR BIDS	12/16/2019

DATE	PROJ NUMBER	ENG	PROJ MGR	CADD	COUNTY	CITY/VILLAGE/TOWNSHIP	H: NTS	SCALE	V: NTS	HORIZ DATUM	VERT DATUM
	0020-19-0040	MK	JD	LM	SHIAWASSEE	OWOSSO				N/A	N/A

CITY OF OWOSSO
WASH WATER PUMP & PIPING REPLACEMENT

UPPER LEVEL POWER PLAN

SHEET E-202

COPYRIGHT 2018 OHM ALL DRAWINGS AND WRITTEN MATERIALS APPEARING HEREIN CONSTITUTE THE ORIGINAL AND UNPUBLISHED WORK OF OHM AND THE SAME MAY NOT BE DUPLICATED, DISTRIBUTED, OR DISCLOSED WITHOUT PRIOR WRITTEN CONSENT OF OHM

DRAWING PATH: \\ohm\dfs\Corporate\Projects\0000_0100\0020\190040_wtp_design_services\Drawings\facilities\Sheets\190040E-202.DWG Dec 16, 2019 - 11:52am

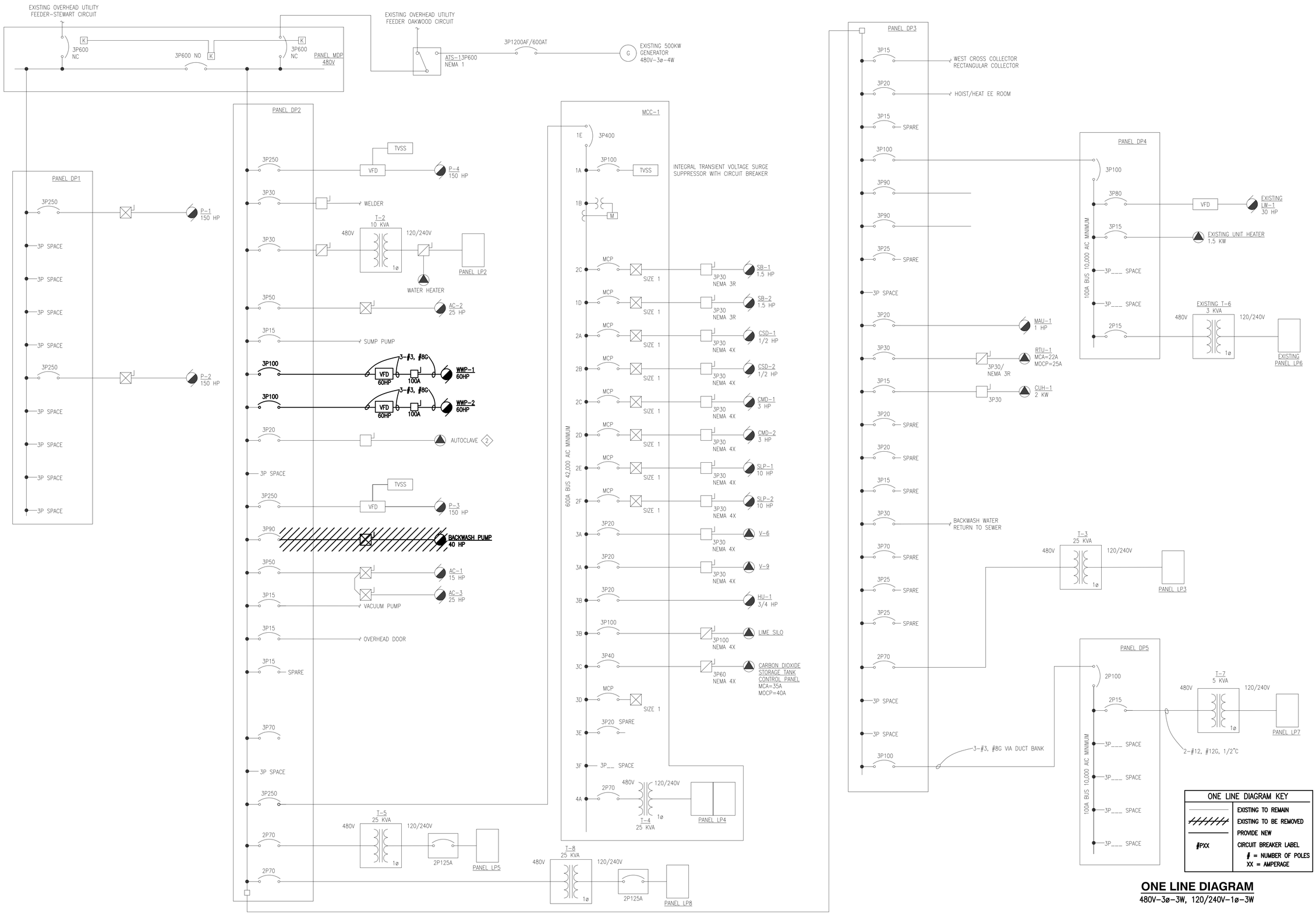

ONE LINE DIAGRAM

480V–3ø–3W, 120/240V–1ø–3W

OHM
ARCHITECTS ENGINEERS PLANNERS
34000 Plymouth Road
Livonia, MI 48150
P (734) 522-6711 | F (734) 522-6427
OHM-ADVISORS.COM

REVISIONS:

ISSUED FOR BIDS 12/16/2019

DATE	PROJ NUMBER	ENG	PROJ MGR	CADD	COUNTY	CITY/VILLAGE/TOWNSHIP	SCALE	HORIZ DATUM	VERT DATUM
	0020-19-0040	MK	JD	LM	SHIAWASSEE	OWOSSO	H: NTS V: NTS	N/A	N/A

CITY OF OWOSSO
WASH WATER PUMP & PIPING REPLACEMENT
PROPOSED ONE-LINE DIAGRAM

SHEET E-401

COPYRIGHT 2016 OHM ALL DRAWINGS AND WRITTEN MATERIALS APPEARING HEREIN CONSTITUTE THE ORIGINAL AND UNPUBLISHED WORK OF OHM AND THE SAME MAY NOT BE DUPLICATED, DISTRIBUTED, OR DISCLOSED WITHOUT PRIOR WRITTEN CONSENT OF OHM

DRAWING PATH: \\ohmdfs\Corporate\Projects\0000_0100\0020\190040_wtp_design_services\Drawings\facilities\Sheets\190040E-401A.DWG Dec 16, 2019 - 11:52am

DP2

DESCRIPTION: EXISTING PANEL SURFACE MOUNT, 480V, 3ϕ, 3W, 800A, MLO, 63 CIRCUIT

IDENTIFICATION	KVA LOAD A	KVA LOAD B	KVA LOAD C	WIRE	POLE	AMP	CIRCUIT	CIRCUIT	AMP	POLE	WIRE	KVA LOAD C	KVA LOAD B	KVA LOAD A	IDENTIFICATION
PUMP 3	96			EX.	3	250	1	2	800	3	EX.	–			MAIN LUGS
		96					3								
			96				5	4					–		
BACKWASH PUMP	0.00			EX.	3	50	7								
		0.00					9	6						–	
			0.				11								
AIR COMP. 1 AND 3	19.2			EX.	3	50	13	8	250	3	EX.	96			PUMP 4
		19.2					15	10					96		
			19.2				17	12						96	
VACUUM PUMP	5.8			EX.	3	15	19	14	30	3	EX.	11.5			WELDER
		5.8					21	16					11.5		
			5.8				23	18						11.5	
WWP-1	**36.96**			**#3**	**3**	**100**	**25**	20	30	2	EX.	15			PANEL 2 XFMR
		36.96					**27**	22					15		
			36.96				**29**	24	50	3	EX.			19.2	AIR COMP. 2
WWP-2	**36.96**			**#3**	**3**	**100**	**31**	26				19.2			
		36.96					**33**	28					19.2		
			36.96				**35**	30	15	3	EX.			5.8	SUMP PUMP
INACTIVE	–			–	2	70	37	32				5.8			
		–					39	34					5.8		
LP-5			26.9	EX.	2	70	41	36	15	3	EX.			–	INACTIVE
	26.9						43	38				–			
AUTO CLAVE		7.7		EX.	3	20	45	40					–		
			7.7				47	42	15	3	EX.			–	INACTIVE
	7.7						49	44				–			
MCC		96		EX.	3	250	51	46					–		
			96				53	48						–	SPACE
	96						55	50	–	–	–	–			
LP-8		26.9		EX.	3	70	57	52					–		
			26.9				59	54						–	SPACE
SPACE	–			–	–	–	61	56	–	–	–	–			
		–					63	58					–		
CONNECTED LOAD	326	326	352									148	148	133	**CONNECTED LOAD**

PANEL 3

DESCRIPTION: EXISTING PANEL SURFACE MOUNT, 120/240V, 1ϕ, 100A, MCB, 24 CIRCUIT

IDENTIFICATION	KVA LOAD A	KVA LOAD B	WIRE	POLE	AMP	CIRCUIT	CIRCUIT	AMP	POLE	WIRE	KVA LOAD B	KVA LOAD A	IDENTIFICATION
CHLORINE RM	1.92		EX.	1	20	1	2	20	1	EX.	1.92		LIGHTS
SUMP PUMP		1.92	EX.	1	20	3	4	20	1	EX.		1.92	ELECTRICAL ROOM RECEPTS
BLOCK HEATER	1.44		EX.	2	15	5	6	20	1	EX.	1.92		LIGHTS
		1.44				7	8	20	1	EX.		1.92	CHARGER
CONTROL POWER	–		**#12**	**1**	**20**	**9**	10	20	1	**#12**	–		**FLOW METER SENSOR**
DISCONNECT RELAY POWER – DR1		–	**#14**	**1**	**15**	**11**	12	20	1	**#12**		–	**FLOW METER TRANSMITTER**
DISCONNECT RELAY POWER – DR2	–		**#14**	**1**	**15**	**13**	14	20	1	**#12**	–		**PRESSURE TRANSDUCER #1**
SPACE		–	–	–	–	**15**	16	20	1	**#12**		–	**PRESSURE TRANSMITTER #2**
SPACE	–		–	–	–	**17**	18	20	1	**#12**	–		**PRESSURE TRANSDUCER #3**
SPACE		–	–	–	–	**19**	20	20	1	**#12**		–	**PRESSURE TRANSDUCER #4**
SPACE	–		–	–	–	**21**	22	–	–	–	–		SPACE
SPACE		–	–	–	–	**23**	24	–	–	–		–	SPACE
CONNECTED LOAD	3	3									4	4	**CONNECTED LOAD**

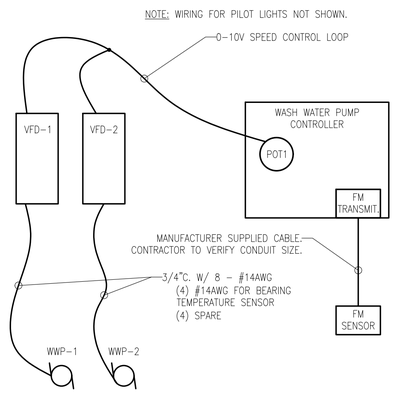

3 CONTROL INTERCONNECTION DIAGRAM
NO SCALE

NOTE:

1. ALL CONDUIT ABOVE GRADE ATTACHED TO RACK, SHALL BE GALVANIZED RIGID.
2. BOND RACK STEEL AND REINFORCEMENT STEEL TO SYSTEM GROUND.
3. REFER TO SHEET E-405 FOR FRONT PANEL DETAIL.
4. CONTRACTOR TO CORE THROUGH FLOOR AS NECESSARY.

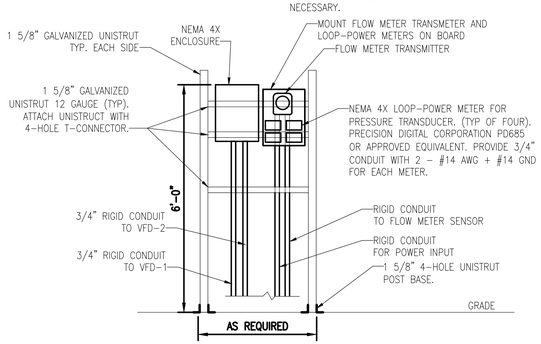

2 WASH WATER PUMP CONTROLLER RACK DETAIL
NOT TO SCALE

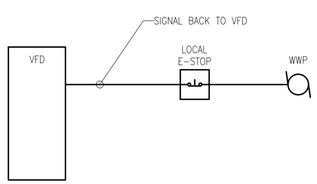

4 E-STOP WIRING DIAGRAM (TYP FOR 2)
NO SCALE

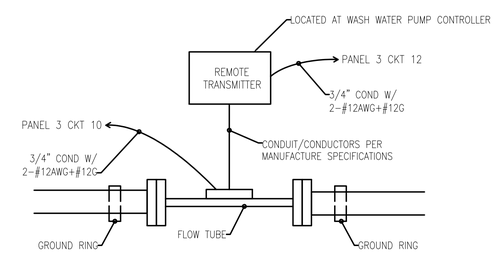

1 MAG METER WIRING DIAGRAM
NO SCALE

OHM
ARCHITECTS ENGINEERS PLANNERS
34000 Plymouth Road
Livonia, MI 48150
P (734) 522-6711 | F (734) 522-6427
OHM-ADVISORS.COM

REVISIONS:
ISSUED FOR BIDS 12/16/2019

DATE | PROJ NUMBER 0020-19-0040 | ENG MK | PROJ MGR JD | CADD LM | COUNTY SHIAWASSEE | CITY/VILLAGE/TOWNSHIP OWOSSO | SCALE H: NTS V: NTS | HORIZ DATUM N/A | VERT DATUM N/A

CITY OF OWOSSO
WASH WATER PUMP & PIPING REPLACEMENT
ELECTRICAL DETAILS AND SCHEDULES

SHEET E-402

COPYRIGHT 2016 OHM ALL DRAWINGS AND WRITTEN MATERIALS APPEARING HEREIN CONSTITUTE THE ORIGINAL AND UNPUBLISHED WORK OF OHM AND THE SAME MAY NOT BE DUPLICATED, DISTRIBUTED, OR DISCLOSED WITHOUT PRIOR WRITTEN CONSENT OF OHM

DRAWING PATH: \\ohmdfs\Corporate\Projects\0000_0100\0020\190040_wtp_design_services\Drawings\facilities\Sheets\190040E-402.DWG Dec 16, 2019 - 11:52am

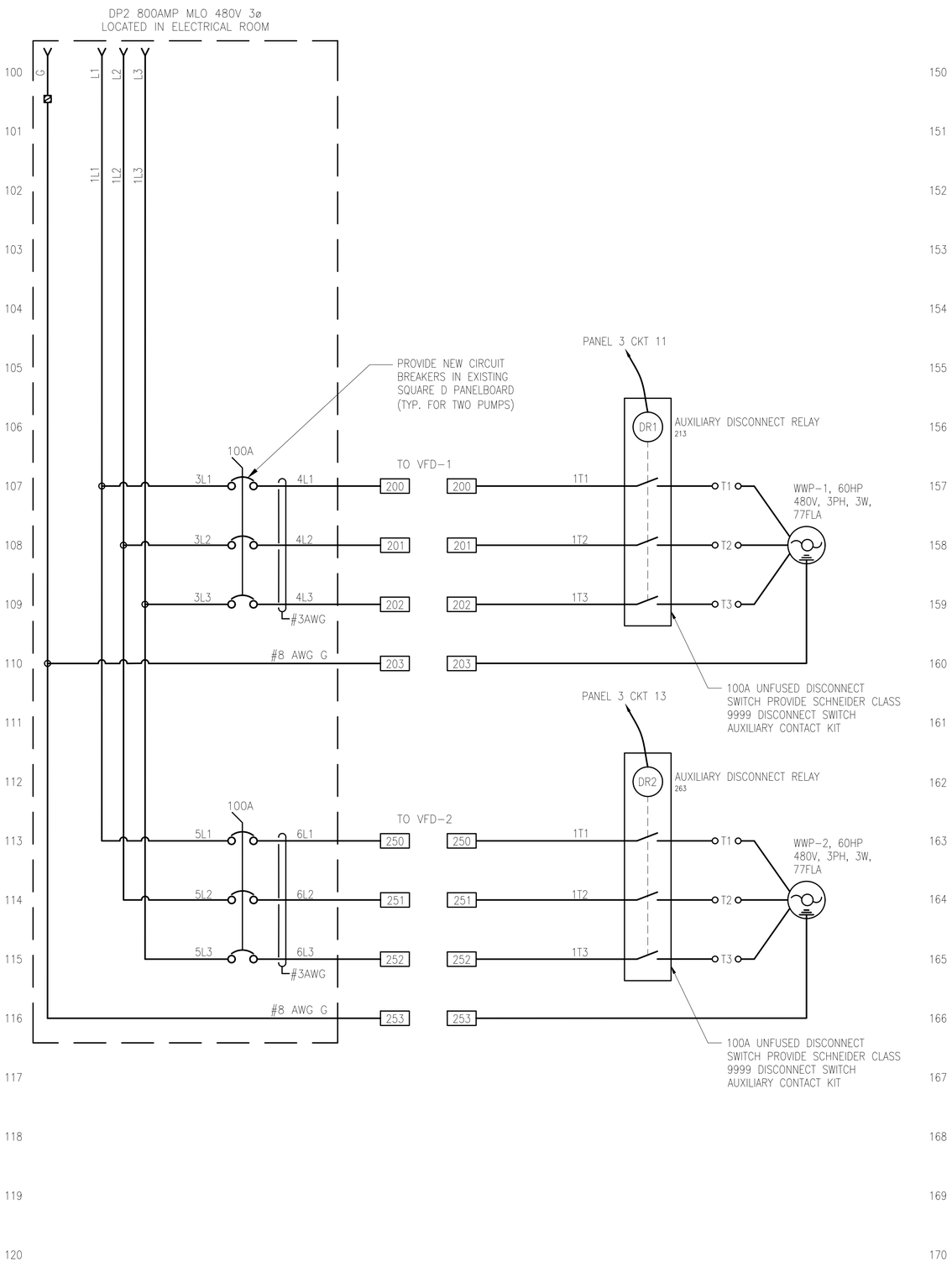

PARTS LIST

ITEM #	QTY.	DESCRIPTION	MANUFACTURER	CATALOG #	P&ID DESIGNATION
1	2	VARIABLE FREQUENCY DRIVES	SCHNEIDER	ATV630	VFD/61A & VFD/61B
2	2	MOTOR DISCONNECT WITH AUX CONTACT			
3	1	PUMP ALTERNATOR	ALLEN-BRADLEY	700-HTA1A1	YS/61
4	5	PILOT LIGHTS PTT	ALLEN-BRADLEY	800H-QTRH2	YL/61, YA/61A, YL/61A & YA/61B, YL/61B
5	1	POTENTIOMETER	SCHNEIDER ELECTRIC	XB4BD912R#K	SK/61
6	2	EMERGENCY STOP BUTTONS	ALLEN-BRADLEY	800H-TFRXJETA	HS/61A & HS/61B
7	1	FLOW METER	REFER TO SPECS		FIT/61
8	1	START PUSH BUTTON	ALLEN-BRADLEY	800H-B103W	HK/61
9	1	STOP PUSH BUTTON	ALLEN-BRADLEY	800H-B604W	HK/61
10	1	120V/24V TRANSFORMER	SQUARE D	9070EO71D7	
11	2	PUMP MONITOR			
12	4	LOOP POWERED INDICATOR – PRESSURE TANSDUCERS	PRECISION DIGITAL	PD685	FOR REMOTE READ OUT OF PRESSURE TRANSDUCERS

NOTE: EQUIVALENT EQUIPMENT IS ACCEPTABLE, AS APPROVED BY ENGINEER

SEQUENCE OF OPERATION

1. USER INITIATES PUMP TO START BY WAY OF PUSH BUTTON (START) AT WASH WATER PUMP CONTROL STATION.
2. ONCE THE "CONTROL INITIATED PILOT LIGHT" IS ILLUMINATED, USER MAY CONTROL THE MOTOR SPEED VIA LOCAL POTENTIOMETER.
3. ONCE FILTER(S) ARE SATISFACTORILY WASHED. USER STOPS PUMP BY WAY OF PUSH BUTTON (STOP) AT CONTROL STATION.

RELAY ABBREVIATIONS

ADRR AUXILIARY DRIVE RUNNING RELAY
ADTR AUXILIARY DRIVE TRIP RELAY
CR CONTROL RELAY
DR DISCONNECT RELAY
RR RUN RELAY

OHM
ARCHITECTS ENGINEERS PLANNERS
34000 Plymouth Road
Livonia, MI 48150
P (734) 522-6711 | F (734) 522-6427
OHM-ADVISORS.COM

REVISIONS:
ISSUED FOR BIDS 12/16/2019

DATE	PROJ NUMBER	ENG	PROJ MGR	CADD	COUNTY	CITY/VILLAGE/TOWNSHIP	SCALE		HORIZ DATUM	VERT DATUM
	0020-19-0040	MK	JD	LM	SHIAWASSEE	OWOSSO	H: NTS	V: NTS	N/A	N/A

CITY OF OWOSSO
WASH WATER PUMP & PIPING REPLACEMENT
PUMP MOTOR AND VFD WIRING DIAGRAM

SHEET E-403

COPYRIGHT 2018 OHM ALL DRAWINGS AND WRITTEN MATERIALS APPEARING HEREIN CONSTITUTE THE ORIGINAL AND UNPUBLISHED WORK OF OHM AND THE SAME MAY NOT BE DUPLICATED, DISTRIBUTED, OR DISCLOSED WITHOUT PRIOR WRITTEN CONSENT OF OHM

DRAWING PATH: \\ohmdfs\Corporate\Projects\0000_0100\0020190040_wtp_design_services\Drawings\facilities\Sheets\190040E-403.DWG Dec 16, 2019 - 11:53am

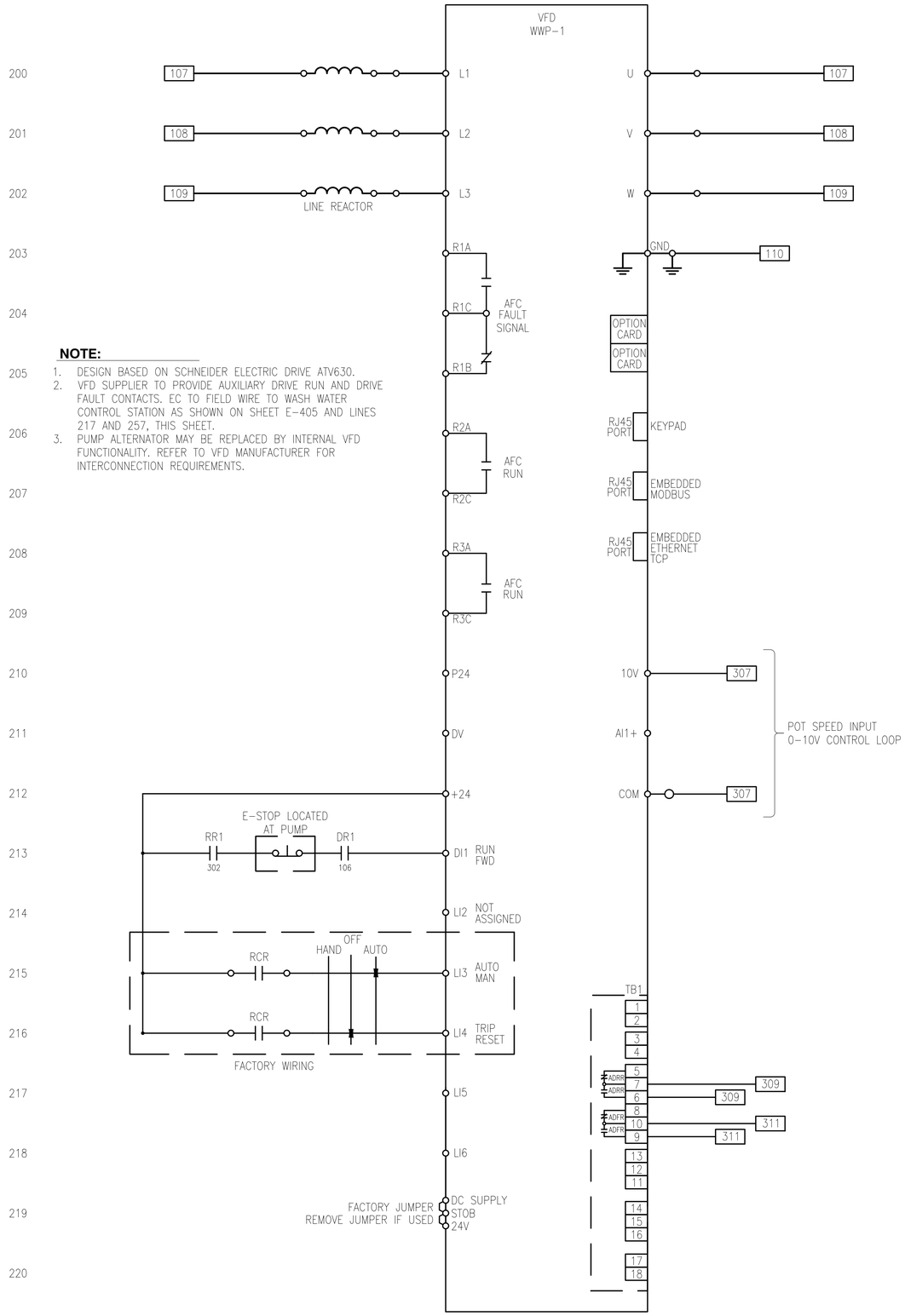

NOTE:

1. DESIGN BASED ON SCHNEIDER ELECTRIC DRIVE ATV630.
2. VFD SUPPLIER TO PROVIDE AUXILIARY DRIVE RUN AND DRIVE FAULT CONTACTS. EC TO FIELD WIRE TO WASH WATER CONTROL STATION AS SHOWN ON SHEET E-405 AND LINES 217 AND 257, THIS SHEET.
3. PUMP ALTERNATOR MAY BE REPLACED BY INTERNAL VFD FUNCTIONALITY. REFER TO VFD MANUFACTURER FOR INTERCONNECTION REQUIREMENTS.

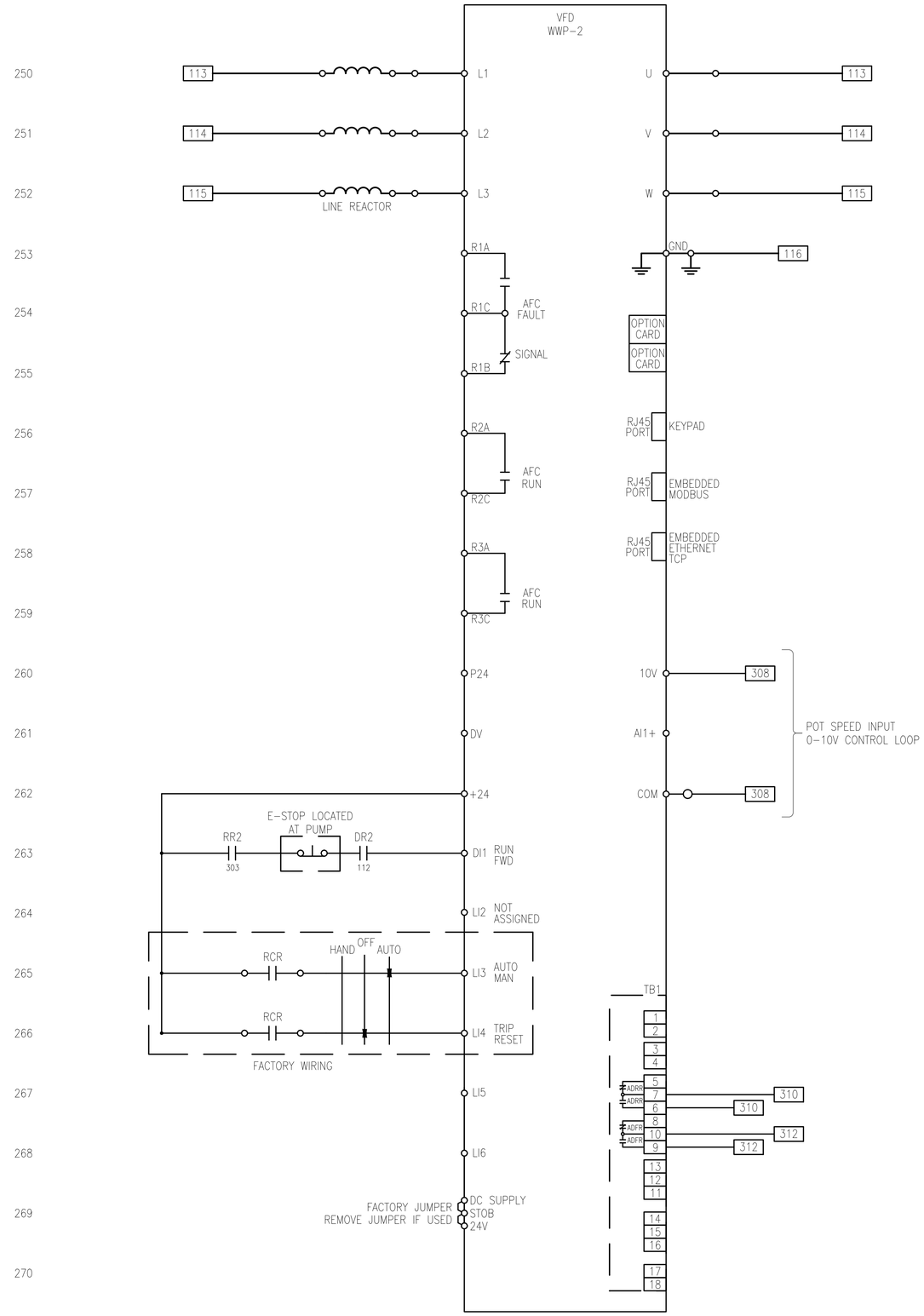

OHM
ARCHITECTS ENGINEERS PLANNERS
34000 Plymouth Road
Livonia, MI 48150
P (734) 522-6711 | F (734) 522-6427
OHM-ADVISORS.COM

REVISIONS:

ISSUED FOR BIDS	12/16/2019
---	---
---	---
---	---
---	---
---	---

DATE	PROJ NUMBER	ENG	PROJ MGR	CADD	COUNTY	CITY/VILLAGE/TOWNSHIP	SCALE		HORIZ DATUM	VERT DATUM
	0020-19-0040	MK	JD	LM	SHIAWASSEE	OWOSSO	H: NTS	V: NTS	NA	NA

CITY OF OWOSSO
WASH WATER PUMP & PIPING REPLACEMENT

VFD WIRING DIAGRAM

SHEET E-404

COPYRIGHT 2018 OHM ALL DRAWINGS AND WRITTEN MATERIALS APPEARING HEREIN CONSTITUTE THE ORIGINAL AND UNPUBLISHED WORK OF OHM AND THE SAME MAY NOT BE DUPLICATED, DISTRIBUTED, OR DISCLOSED WITHOUT PRIOR WRITTEN CONSENT OF OHM.

DRAWING PATH: \\ohmdfs\Corporate\Projects\0000_0100\0020\190040_wtp_design_services\Drawings\facilities\Sheets\190040E-403.DWG Dec 16, 2019 - 11:53am

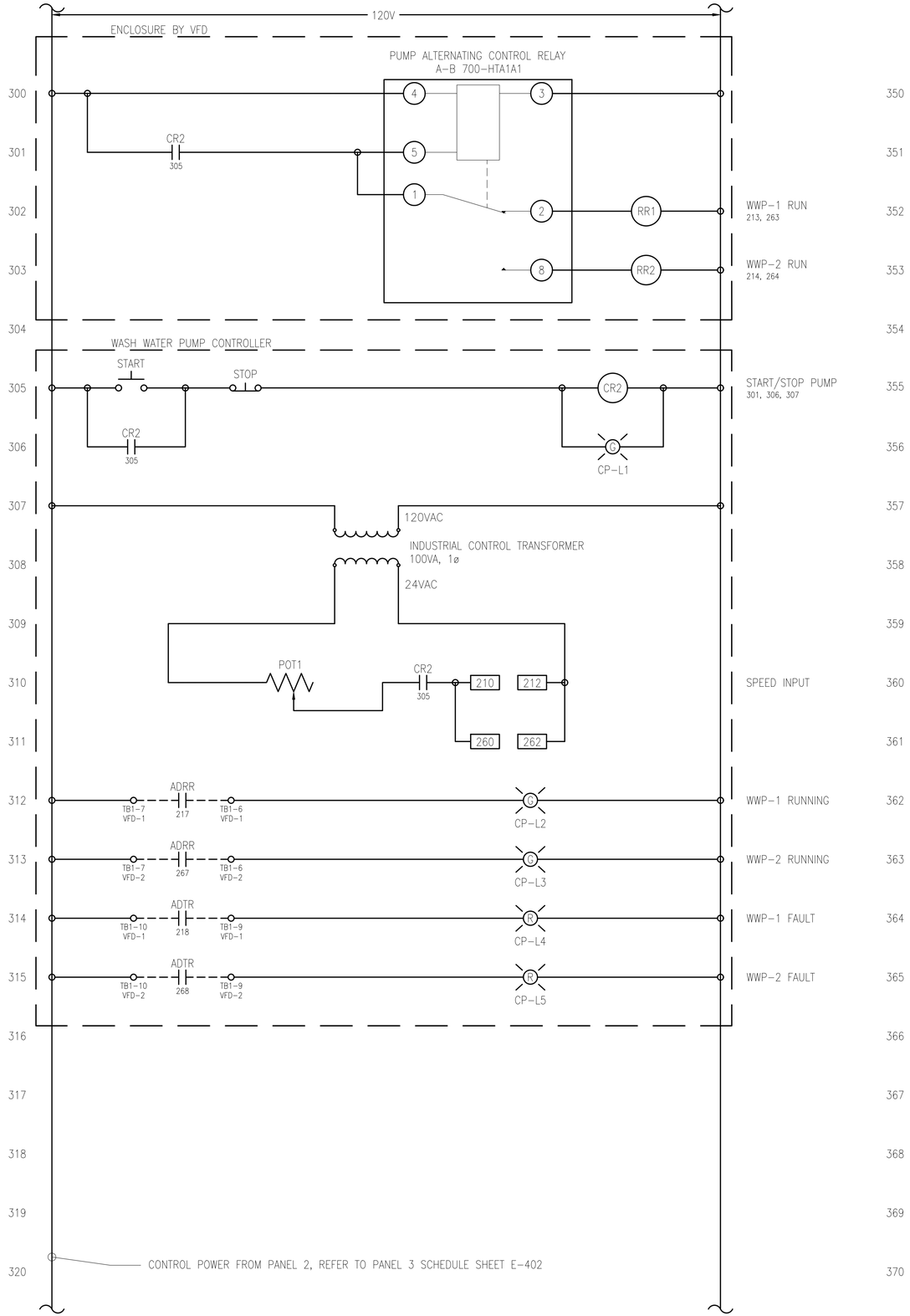

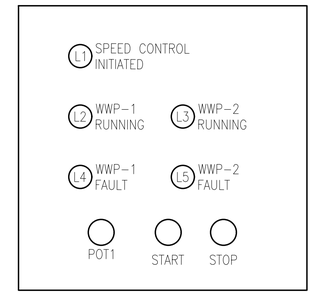

WASH WATER PUMP CONTROLLER - FRONT PANEL LAYOUT

NOTES:
1. PROVIDE NEMA 4X ENCLOSURE, MOUNTED ON UNISTRUT RACK, REFER TO SHEET E-402 FOR RACK ELEVATION.
2. POWER (4) LOOP POWERED INDICATOR FROM INDUSTRIAL CONTROL TRANSFORMER MOUNTED IN WASH WATER PUMP CONTROLLER. INDICATOR FOR (4) PRESSURE TRANSDUCERS.

OHM
ARCHITECTS ENGINEERS PLANNERS
34000 Plymouth Road
Livonia, MI 48150
P (734) 522-6711 | F (734) 522-6427
OHM-ADVISORS.COM

REVISIONS:
ISSUED FOR BIDS 12/16/2019

DATE	PROJ NUMBER	ENG	PROJ MGR	CADD	COUNTY	CITY/VILLAGE/TOWNSHIP	SCALE		HORIZ DATUM	VERT DATUM
	0020-19-0040	MK	JD	LM	SHIAWASSEE	OWOSSO	H: NTS	V: NTS	N/A	N/A

CITY OF OWOSSO
WASH WATER PUMP & PIPING REPLACEMENT
CONTROL WIRING

SHEET E-405

COPYRIGHT 2018 OHM ALL DRAWINGS AND WRITTEN MATERIALS APPEARING HEREIN CONSTITUTE THE ORIGINAL AND UNPUBLISHED WORK OF OHM AND THE SAME MAY NOT BE DUPLICATED, DISTRIBUTED, OR DISCLOSED WITHOUT PRIOR WRITTEN CONSENT OF OHM

DRAWING PATH: \\ohmdfs\Corporate\Projects\0000_0100\0020190040_wtp_design_services\Drawings\facilities\Sheets\190040E-403.DWG Dec 16, 2019 - 11:53am